STORMWATER MANAGEMENT DEPARTMENT
140 Stonewall Ave. W.
Suite 203
Fayetteville, GA 30214
P 770-305-5410 F 770-305-5256

Erosion and Sedimentation Control Residential Inspection Packet

The Fayette County Stormwater Department routinely inspects all construction sites to determine if land disturbing activities are being conducted in accordance with individual or master erosion control plans and/or the "Manual for Erosion and Sedimentation Control in Georgia."[1]

Sites are evaluated to determine if required measures are effective in controlling erosion and sedimentation. Additional erosion control measures may be required to achieve compliance with the "Fayette County Soil Erosion and Sedimentation Control Ordinance,"[2] Article IX of the Fayette County Development Ordinance, and the "Manual for Erosion and Sedimentation Control in Georgia." [1]

If, through inspection, construction sites are found to be out of compliance because of a failure to properly design, install, and/or maintain the required erosion and sedimentation control measures, a Notice of Violation (NOV) will be posted on the site. This notice will state measures necessary to achieve compliance and the date required to do so.. While under an NOV, the builder may continue to work on the site but ***must correct all deficiencies prior to the date stated on the NOV.***

If the responsible party fails to correct deficiencies by the deadline stated on the NOV, he or she shall be deemed in violation of the Erosion and Sediment Control Ordinance and a Stop Work Order (SWO) will be posted for the site. A SWO will also be issued if a NOV for the same violation has been issued three or more times. ***While under a SWO no construction activity shall be conducted, including but not limited to interior and exterior work, until all deficiencies have been corrected and the SWO has been removed from the site.***

---

[1] www.gaswcc.org
[2] www.fayettecountyga.gov

The inspection includes, but is not limited to, the following erosion control measures:

Construction Exit (Co)

- Located where traffic leaves the construction site.
- Reduces or eliminates the transport of mud onto public rights-of-way.
- Minimum size – 50’ long x 20’ wide, 6” deep.
- Materials – 1.5”-3.5” stone, with geotextile underliner.
- May require periodic maintenance and top dressing.

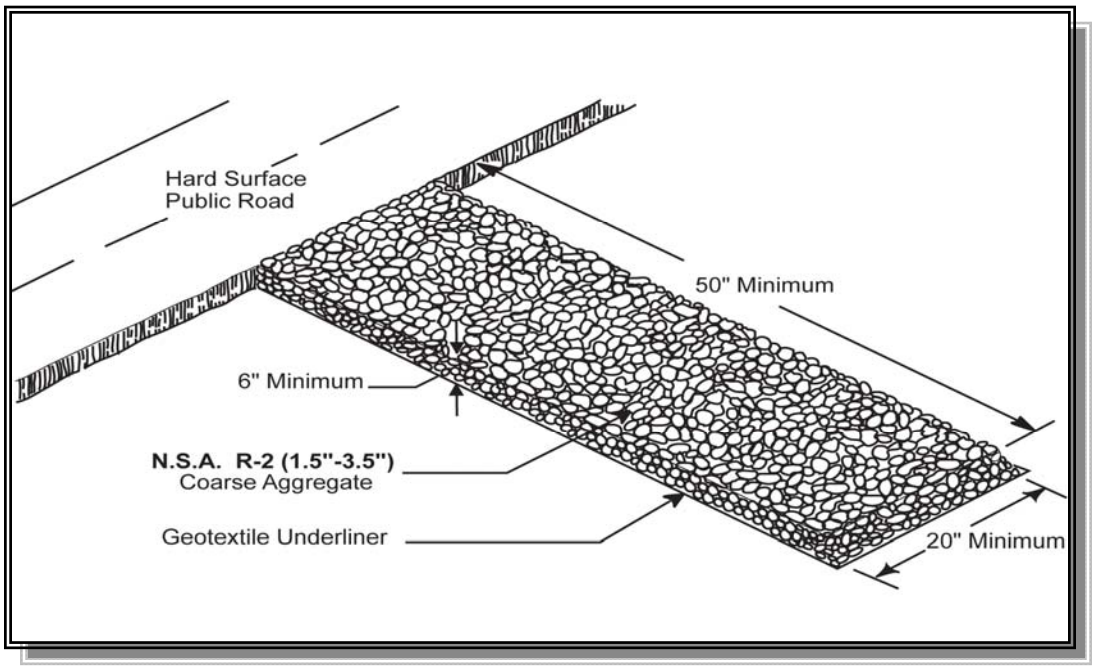

Sediment Barrier (Sd1)

- **Prevents sediment from leaving the site by slowing storm water runoff and depositing sediment at the structure.**
- **Silt fence shall not be installed across streams, ditches, waterways, or other concentrated flow areas.**
- **Sediment shall be removed once it has accumulated to one-half the original height of the barrier.**
- **Filter fabric shall be replaced whenever it deteriorates to the point where effectiveness of the fabric is reduced (approximately 6 months).**
- **Sediment barriers remain in place until disturbed areas have been permanently stabilized.**

Hay or Straw Bales (Sd1-Hb)

- Place in a single row, lengthwise and perpendicular to flow.
- Embed in the soil to a depth of 4 inches.
- Secure with stakes or bars driven through the bales or by other adequate means.
- Should not be used if project duration will exceed 3 months.

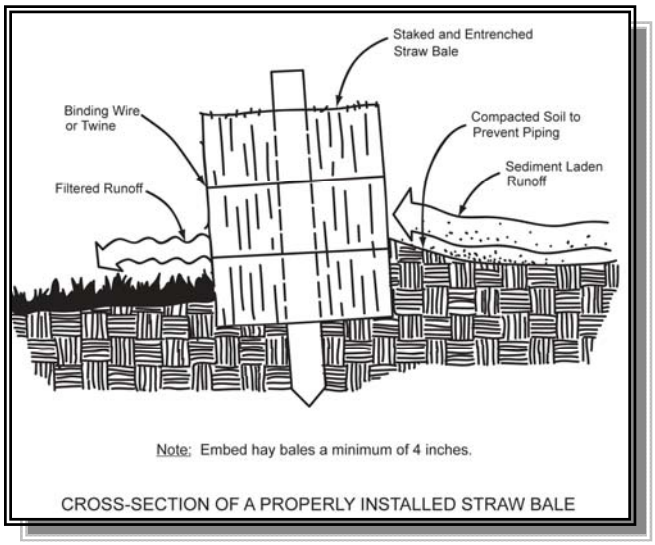

CROSS-SECTION OF A PROPERLY INSTALLED STRAW BALE

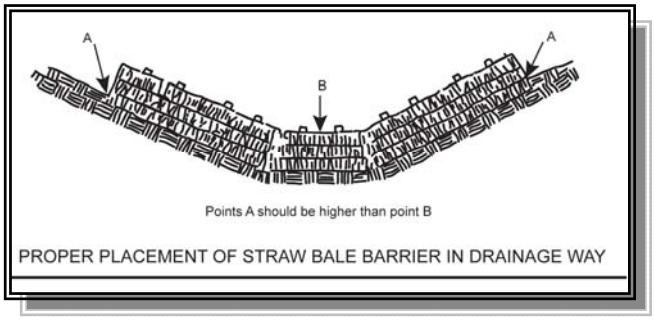

PROPER PLACEMENT OF STRAW BALE BARRIER IN DRAINAGE WAY

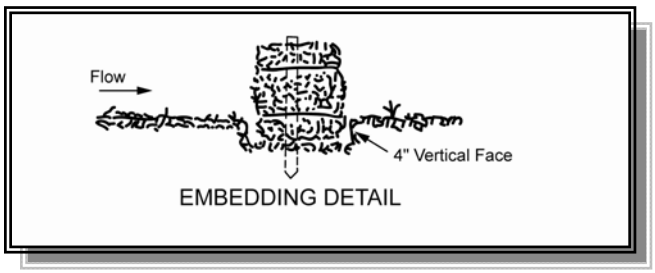

EMBEDDING DETAIL

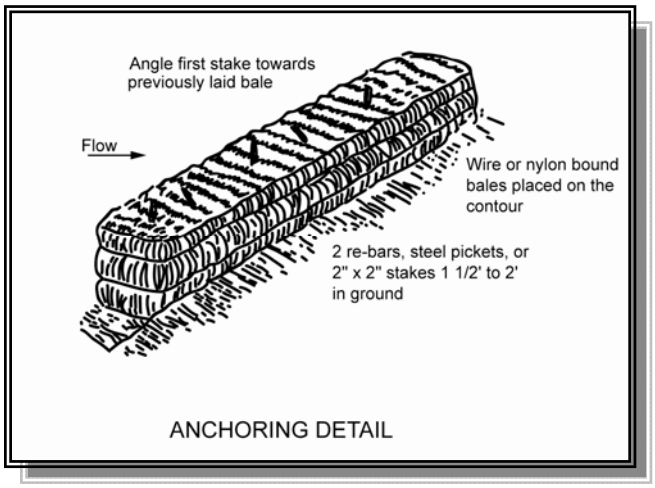

ANCHORING DETAIL

Type "A" Silt Fence (Sd1-A)

- Use 36" D.O.T. approved fabric.

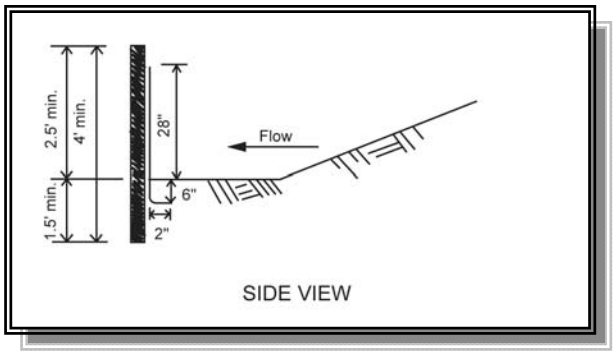

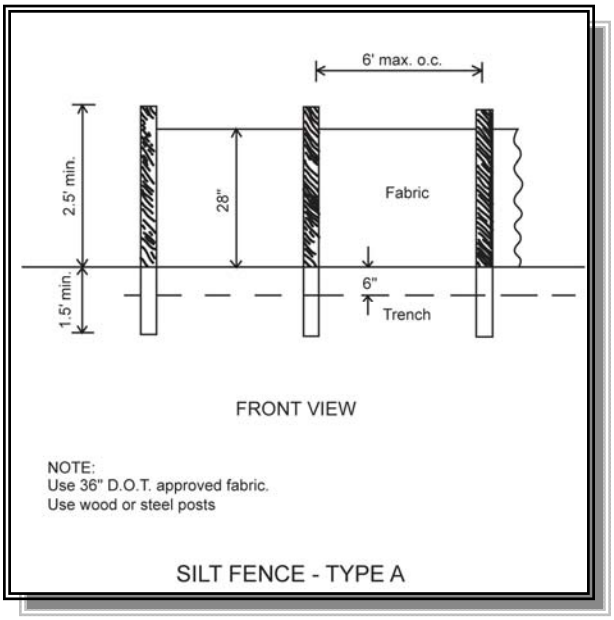

- **Type "C" Silt Fence (Sd1-C)**
  - Use 36" D.O.T. approved fabric with wire reinforcement.
  - Use steel posts – only.
  - **Along stream buffers and other sensitive areas, 2-rows of Type "C" silt fence or one row of Type "C" silt fence backed by hay bales shall be used.**

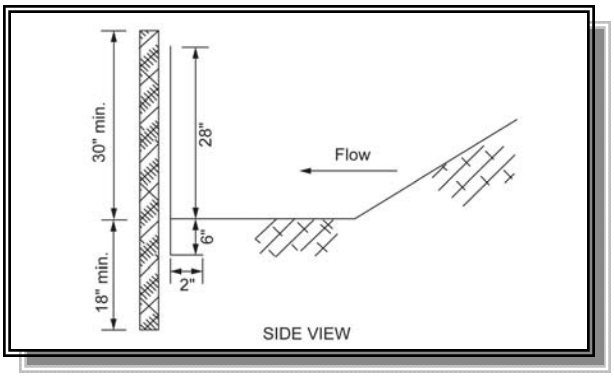

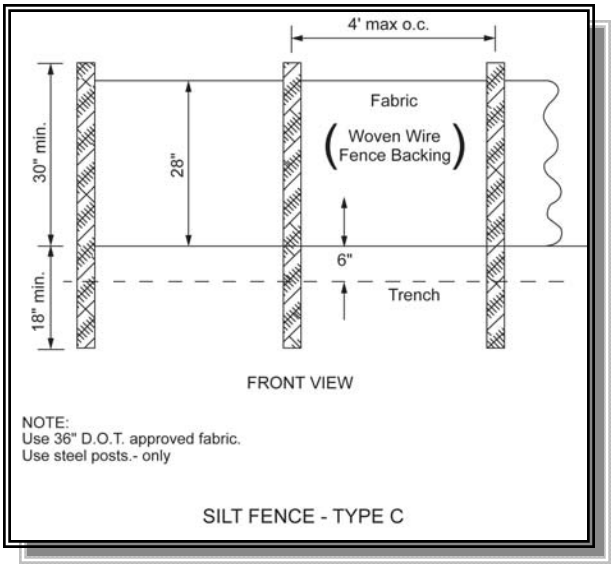

If the construction exit or silt fence fails and mud flows or is tracked onto the road, it shall be cleaned up immediately. Mud should be scraped off the road and disposed of in a appropriate waste receptacle. Washing mud off the street and into storm sewers is unacceptable since sediment will contaminate nearby streams and waterways.

Sediment that accumulates in curb inlets and curb inlet protectors shall be cleaned out and inspected by the adjacent construction site operators.

Roadways and curb inlets shall be inspected daily, after each rain event and repairs made as needed.

Temporary Stabilization Without Seed

- Suitable for areas that will remain disturbed for less than 6 months.
- Mulch or temporary grassing shall be applied to all exposed areas **within 14 days of disturbance**.
- Shall have a continuous **90% cover or greater of the soil surface**.
- Requires maintenance to maintain appropriate depth and 90% cover.
    - **Mulching Without Seeding**
        - Dry straw or hay – apply at a depth of 2-4 inches.
        - Wood chips or bark – apply at a depth of 2-3 inches.

Temporary Stabilization With Seed and Straw

- Suitable for areas that will remain disturbed for less than 6 months.
- Mulch or temporary grassing shall be applied to all exposed areas **within 14 days of disturbance**.
- Shall have a continuous **90% cover or greater of the soil surface**.
- Requires maintenance to maintain appropriate depth and 90% cover.
    - **Temporary Seeding**
        - Soil shall be loosened or scarified to provide a place for seed to lodge and germinate.
        - Requires appropriate seedbed preparation. See "Manual for Erosion and Sedimentation Control in Georgia," Chapter 6-35.
        - A grass or grass/legume mixture suitable to the area and season of the year should be selected.
- **See Table 6-4.1 (attached) for plants, planting rates, and planting dates.**

See Page Table 6-5.1 (attached) for Fertilizer Requirements

Permanent Vegetation (Perennial Grassing/Landscaping for Final Stabilization)

- Suitable for areas that will be disturbed for longer that 6 months.
- Applied to all areas at final grade.
- Shall achieve **70% coverage over 100% of the area** within the growing season.
- Requires appropriate seed/planting bed preparation. See "Manual for Erosion and Sedimentation Control in Georgia," Chapter 6-41.
- Examples of final stabilization include: trees, shrubs, vines, grasses and permanent mulches.
- **See Page Table 6-5.2 (attached) for plants, planting rates, and planting dates for permanent cover.**
- **See Page Table 6-5.1 (attached) for Fertilizer Requirements.**

Permanent Vegetation (With Sod)

- A permanent vegetative ground cover.
- Appropriate for areas which require immediate vegetative cover, drop inlets, grass swales, and waterways with intermittent flow.
- Requires appropriate soil preparation. See "Manual for Erosion and Sedimentation Control in Georgia," Chapter 6-5.7.

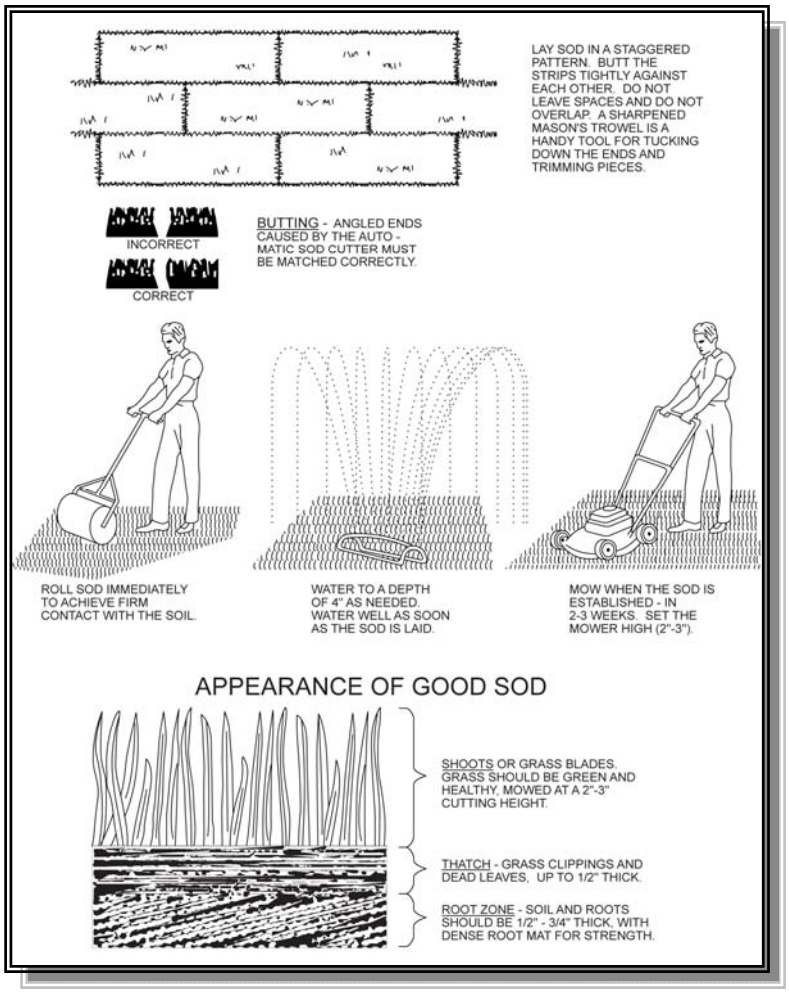

References:

State Soil and Water Conservation Commission of Georgia, “The Manual for Erosion and Sediment Control in Georgia, 2000

“The Development Regulations of Fayette County, Georgia” (Ordinance 86-13,1-1,7-24-86)

Table 6-5.1. Fertilizer Requirements

TYPE OF SPECIES	YEAR	ANALYSIS OR EQUIVALENT N-P-K	RATE	N TOP DRESSING RATE
1. Cool season grasses	First Second Maintenance	6-12-12 6-12-12 10-10-10	1500 lbs./ac. 1000 lbs./ac. 400 lbs./ac.	50-100 lbs./ac. 1/2/ __ 30
2. Cool season grasses and legumes	First Second Maintenance	6-12-12 0-10-10 0-10-10	1500 lbs./ac. 1000 lbs./ac. 400 lbs./ac.	0-50 lbs./ac. 1/ __ __
3. Ground covers	First Second Maintenance	10-10-10 10-10-10 10-10-10	1300 lbs./ac. 3/ 1300 lbs./ac. 3/ 1100 lbs./ac.	__ __ __
4. Pine seedlings	First	20-10-5	one 21-gram pellet per seedling placed in the closing hole	__
5. Shrub Lespedeza	First Maintenance	0-10-10 0-10-10	700 lbs./ac. 700 lbs./ac. 4/	__
6. Temporary cover crops seeded alone	First	10-10-10	500 lbs./ac.	30 lbs./ac. 5/
7. Warm season grasses	First Second Maintenance	6-12-12 6-12-12 10-10-10	1500 lbs./ac. 800 lbs./ac. 400 lbs./ac.	50-100 lbs./ac. 2/6/ 50-100 lbs./ac. 2/ 30 lbs./ac.
8. Warm season grasses and legumes	First Second Maintenance	6-12-12 0-10-10 0-10-10	1500 lbs./ac. 1000 lbs./ac. 400 lbs./ac.	50 lbs./ac./6/

1/ Apply in spring following seeding.
2/ Apply in split applications when high rates are used.
3/ Apply in 3 split applications.
4/ Apply when plants are pruned.
5/ Apply to grass species only.
6/ Apply when plants grow to a height of 2 to 4 inches.

Table 6-4.1 - Temporary Cover for Companion Crops[1]

PLANT, PLANTING RATES, AND PLANTING DATES FOR TEMPORARY COVER OR COMPANION CROPS[1]

Species	Broadcast Rates[2] PLS[3] Per Acre	Per 1000 sq.ft.	Planting Dates by Resource Areas Planting Dates (Solid lines indicate optimum dates, dotted lines indicate permissible but marginal dates.)	Remarks
MILLET, BROWNTOP (Panicum fasciculatum)			J F M A M J J A S O N D	
alone	40 lbs.	0.9 lb.		137,000 seed per pound. Quick dense cover. Will provide too much competition in mixtures if seeded at high rates.
in mixtures	10 lbs.	0.2 lb.		
MILLET, PEARL (Pennesetum glaucum)			J F M A M J J A S O N D	
alone	50 lbs	1.1 lb.		88,000 seed per pound. Quick dense cover. May reach 5 feet in height. Not recommended for mixtures.
OATS (Avena sativa)			J F M A M J J A S O N D	
alone	4 bu. (128 lbs.)	2.9 lb.		13,000 seed per pound. Use on productive soils. Not as winter hardy as rye or barley.
in mixtures	1 bu. (32 lbs.)	0.7 lb.		
RYE (Secale cereale)			J F M A M J J A S O N D	
alone	3 bu. 168 (lbs.)	3.9		18,000 seed per pound. Quick cover. Drought tolerant and winter hardy.
in mixtures	1/2 bu. 28 lbs.	0.6 lb.		
RYEGRASS, ANNUAL (Lolium temulentum)		C	J F M A M J J A S O N D	
alone	40 lbs.	0.9 lb		227,000 seed per pound. Dense cover. Very competitive and is not to be used in mixtures.
SUDANGRASS (Sorghum Sudanese)			J F M A M J J A S O N D	
alone	60 lbs.	1.4 lb.		55,000 seed per pound. Good on drought sites. Not recommended for mixtures.
WHEAT (Triticum Aestivum)			J F M A M J J A S O N D	
alone	3bu. (180 lbs.)	4.1 lb		15,000 seed per pound.
in mixtures	1/2 bu. (30 lbs.)	0.7 lb.		

[1] Temporary cover crops are very competitive and will crowd our perennials if seeded too heavily

[2] Reduce seeding rates by 50% when drilled.

[3] PLS is an abbreviation for Pure Live Seed.

Table 6-5.2 - Permanent Cover

PLANT, PLANTING RATES, AND PLANTING DATES FOR PERMANENT COVER

Species	1/ - PLS 2/ Per Acre	Per 1000 sq.ft.	Planting Dates by Resource Areas Planting Dates (Solid lines indicate optimum dates, dotted lines indicate permissbale but marginal dates.)												Remarks
			J	F	M	A	M	J	J	A	S	O	N	D	
BAHIA, PENSACOLA (Paspalum notatum) alone or with temporary cover	60 lbs.	1.4 lb.													166,000 seed per pound. Low growing. Sod forming. Slow to establish. Plant with a companion crop. Will spread into bermuda pastures and lawns. Mix with Sericea lespedeza or weeping lovegrass.
with other perenials	30 lbs.	0.7 lb.													
			J	F	M	A	M	J	J	A	S	O	N	D	
BAHIA, WILMINGTON (Paspalum notatum) alone or with temporary cover	60 lbs.	1.4 lb.													166,000 seed per pound. Low growing. Sod forming. Slow to establish. Plant with a companion crop. Will spread into bermuda pastures and lawns. Mix with Sericea lespedeza or weeping lovegrass.
with other perenials	30 lbs.	0.7 lb.													
			J	F	M	A	M	J	J	A	S	O	N	D	
BERMUDA, COMMON (Cynodon dactylon) Hulled seed alone	10 lbs.	0.2 lb.													1,787,000 seed per pound. Quick cover. Low growing and sod forming. Full sun. Good for athletic fields.
with other perenials	6 lbs.	0.1 lb.													
			J	F	M	A	M	J	J	A	S	O	N	D	
BERMUDA, COMMON (Cynodon dactylon) Unhulled seed with temporary cover	10 lbs.	0.2 lb.													Plant with winter annuals. Plant with tall fescue.
with other perenials	6 lbs.	0.1 lb.													
			J	F	M	A	M	J	J	A	S	O	N	D	
BERMUDA, SPRIGS (Cynodon dactylon) Coastal, Common, or Tift 44	40 cu. ft. or sod plugs 3' X 3'	0.9 cu.ft.													A cubic foot contains approximately 650 sprigs. A bushel contains 1.25 cubic feet or approximately 500 sprigs.
			J	F	M	A	M	J	J	A	S	O	N	D	
CENTIPEDE (Eremochloa ophiuroides)	Block sod only														Drought tolerant. Full sun or partial shade. Effective adjacent to concrete and in concentrated flow areas. Irrigation is needed until fully estabilzhed. Do not plant near pastures. Winterhardy as far north as Athens and Atlanta.
			J	F	M	A	M	J	J	A	S	O	N	D	
CROWNVETCH (Coronilla varia) with winter annuals or cool season grasses	15 lbs/	0.3 lb.													100,000 seed per pounf. Dense growth. Drought tolerant and fire resistant. Attractive rose, pink, and white blossoms spring to late fall. Mix with 30 lbs of Tall Fescue or 15 lbs of rye. Innoculate seed with M inoculant. Use from North Atlanta and Northward.

1/ Reduce seeding rates by 50% when drilled.
2/ PLS is an abbreviation for Pure Live Seed

Table 6-5.2 - Permanent Cover

PLANT, PLANTING RATES, AND PLANTING DATES FOR PERMANENT COVER

Species	1/ - PLS 2/ Per Acre	Per 1000 sq.ft.	Planting Dates by Resource Areas Planting Dates (Solid lines indicate optimum dates, dotted lines indicate permissbale but marginal dates.)	Remarks
FESCUE, TALL			J F M A M J J A S O N D	
(Festuca arundinacea)				
alone	50 lbs.	1.1 lbs.		
with other perennials	30 lbs.	0.7 lb.		227,000 seed per pound. Use alone only on better sites. Not for drought soils. Mix with perennial lespedezas or crownvetch. Apply topdressing in spring following fall plantings. Not for heavy use areas or athletic fields.
LESPEDEZA, SERICEA			J F M A M J J A S O N D	
(Lespedeza cuneata)				
scarified	60 lbs.	1.4 lbs.		350,000 seed per pound. Widely adapted. Low maintenance. Mix with weeping lovegrass, common bermuda, bahia, or tall fescue. Takes 2 - 3 years to become fully established. Excellent on road banks. Inoculate seed with EL inoculant.
unscarified	75 lbs.	1.7 lb.		Mix with Tall fescue or winter annuals.
seed-bearing hay	3 tons	138 lbs.		Cut when seed is mature, but before it shatters. Add Tall fescue to winter annuals.
LESPEDEZA			J F M A M J J A S O N D	
Ambro virgata (Ledpedeza virgata DC) or Appalow (Lespedza cuneata [Dumont] G. Don)				300,000 seed per pound. Height of growth is 18 - 24 inches. Advantageous in urban areas. Spreading-type growth has bronze coloration. Mix with Weeping lovegrass, Common bermuda, bahia, tall fescue, or winter annuals. Do not mix with Sericea lespedaza. Slow to develop solid stands. Inoculate seed with EL inoculate.
scarified	60 lbs.	1.4 lb.		
unscarified	75 lbs.	1.7 lb.		

1/ Reduce seeding rates by 50% when drilled.
2/ PLS is an abbreviation for Pure Live Seed

Table 6-5.2 - Permanent Cover

PLANT, PLANTING RATES, AND PLANTING DATES FOR PERMANENT COVER

Species	1/ - PLS 2/ Per Acre	Per 1000 sq.ft.	Planting Dates by Resource Areas Planting Dates (Solid lines indicate optimum dates, dotted lines indicate permissbale but marginal dates.)												Remarks
			J	F	M	A	M	J	J	A	S	O	N	D	
LESPEDEZA, SHRUB (Lespedeza bicolor) (Lespedeza thumbergii) plants	3' x 3'		___	___	___								___	___	Provide wildlife food and cover.
			J	F	M	A	M	J	J	A	S	O	N	D	
LOVEGRASS, WEEPING (Eragrostis curvula) alone	4 lbs.	0.1 lb.			------	------	------	------							1,500,000 seed per pound. Quick cover. Drought tolerant. Grows well with Sericea lespedeza on road banks.
with other perennials	2 lbs.	0.05 lb.													
			J	F	M	A	M	J	J	A	S	O	N	D	
MAIDENCANE (Panicum hemitomon) sprigs	2' x 3' spacing		-----	___	___	----									For very wet sites. May clog channels. Dig sprigs from local sources. Use along river banks and shorelines.
			J	F	M	A	M	J	J	A	S	O	N	D	
PANICGRASS, ATLANTIC COASTAL (Panicum amarum var. amarulum)	20 lbs.	0.5 lb.		------	___	___									Grows well on coastal sand dunes, borrow areas, and gravel pits. Provides winter cover for wildlife. Mix with Sericea lespedeza except on sand dunes.
			J	F	M	A	M	J	J	A	S	O	N	D	
REED CANARY GRASS (Phalaris arundinacea) alone	50 lbs.	1.1 lb.								----	___	------			Grows similar to tall fescue.
with other perennials	30 lbs.	0.7 lb.													
			J	F	M	A	M	J	J	A	S	O	N	D	
SUNFLOWER, 'AZTEC' MAXIMILLIAM (Helianthus maximiliani)	10 lbs.	0.2 lb.				-----	___								227,000 seed per pound. Mix with weeping lovegrass or other low-growing grasses or legumes.

1/ Reduce seeding rates by 50% when drilled.
2/ PLS is an abbreviation for Pure Live Seed