New Business #9

COUNTY AGENDA REQUEST

Department:	Department of Public Health	Presenter(s):	Kathy Hobbs / Robert Kurbes
Meeting Date:	Thursday, April 10, 2014	Type of Request:	New Business

Wording for the Agenda:

Consideration of staff's recommendation to adopt Ordinance 2014-06, adding Chapter 15 to the Fayette County Code of Ordinances-Public Health.

Background/History/Details:

The Georgia Department of Public Health recently updated its Rules and Regulations pertaining to Tourist Accommodations (Chapter 511-6-2.) These updated rules and regulations went into effect on January 1, 2014. A copy of the rules and regulations are provided in the supporting documentation beginning on page 32 .

Staff is requesting the Board of Commissioners to adopt Ordinance 2014-06 (Attachment A; page 2). Adopting Ordinance 2014-06 will add Chapter 15: Public Health to the Fayette County Code of Ordinances and will adopt the Rules and Regulations as it pertains only to the Department of Public Health.

What action are you seeking from the Board of Commissioners?

Consideration of staff's recommendation to adopt Ordinance 2014-06, adding Chapter 15 to the Fayette County Code of Ordinances-Public Health.

If this item requires funding, please describe:

Not Applicable.

Has this request been considered within the past two years?	No	If so, when?	
Is Audio-Visual Equipment Required for this Request?*	No	Backup Provided with Request?	Yes

**** All audio-visual material must be submitted to the County Clerk's Office no later than 48 hours prior to the meeting. It is also your department's responsibility to ensure all third-party audio-visual material is submitted at least 48 hours in advance.***

Approved by Finance	Not Applicable	Reviewed by Legal	
Approved by Purchasing	Not Applicable	County Clerk's Approval	Yes
Administrator's Approval			

Staff Notes:

STATE OF GEORGIA
FAYETTE COUNTY

ORDINANCE NO. 2014-06

AN ORDINANCE TO ADD CHAPTER 15 TO THE FAYETTE COUNTY CODE OF ORDINANCES: PUBLIC HEALTH; TO PROVIDE FOR SEVERABILITY; TO REPAEAL CONFLICTING LAWS, ORDINANCES AND RESOLUTIONS; TO PROVIDE AN EFFECTIVE DATE; AND FOR OTHER PURPOSES ALLOWED BY LAW.

Whereas, the duly elected governing authority of Fayette County is the Board of Commissioners thereof;

Whereas, the governing authority desires to create Chapter 15: Public Health that provides regulations for Public Health as allowed by the State of Georgia.

Whereas, the health, safety, and welfare of the citizens of Fayette County, Georgia shall be improved and protected by adoption and implementation of this ordinance.

BE IT ORDAINED BY THE BOARD OF COMMISSIONERS OF FAYETTE COUNTY AND IT IS HEREBY ORDAINED BY AUTHORITY THEREOF:

Section 1. The Fayette County Code of Ordinances, Chapter 15, Public Health, is hereby created with the following:

CHAPTER 15. PUBLIC HEALTH

ARTICLE 1 – IN GENERAL

Section 15-1 Authority

These rules are adopted pursuant to the Official Code of Georgia Annotated §§ 31-2A-6 and 31-28-1 *et seq.*[Authority: O.C.G.A. §§ 31-2A-6 and 31-28-5]

Section 15-2 Title and Purpose. These rules shall be known as the Rules and Regulations for Tourist Accommodations. The purpose of these rules is to emphasize the minimum standards necessary for tourist accommodations to provide essential services, facilities, and sanitary conditions in order to protect the public health and safety.
[Authority: O.C.G.A. §§ 31-2A-6 and 31-28-5]
Tourist Accommodations Chapter 511-6-2

Article 2 – Tourist Accommodations

15-3 Definitions. The following definitions shall apply in the interpretation and enforcement of these rules:

(a) **"Approved"** means acceptable to the Health Authority based on a determination of conformity with principles, practices, and generally recognized standards that protect public health.

(b) **"Bed and Breakfast Inn"** means an establishment of twenty guestrooms or less, which serves food only to its registered tourists , and serves only a breakfast or similar early morning meal and an appropriate light snack in which the price of the food is included in the price of the overnight accommodation. For purposes of the rules, "Bed and Breakfast Inn" refers to an establishment in which the predominant relationship between the occupants thereof and the owner or operator of the establishment is that of innkeeper and tourist."

(c) **"Consumer"** means in terms of relationship with a tourist accommodation, a transient person who becomes a guest of a tourist accommodation and is a member of the public, takes possession of food, receives lodging and services for a fee, is not functioning in the capacity of an operator of a tourist accommodation establishment and does not offer the food for resale.

(d) **"Continental breakfast"** is defined as and may include
(1) any non-potentially hazardous food (non-time/temperature control for safety food) which has been prepared commercially by a food processing plant that meets requirements of law and is served to the consumer out of the original container in which it was purchased or if approved by the Health Authority, it may be served out of a commercial, self-service dispenser if such dispensers are properly designed to protect contained food from the consumer;
(2) non-potentially hazardous beverages such as coffee and hot tea served in the container in which it was prepared;
(3) potentially hazardous foods (time/temperature control for safety foods) such as milk, cream, butter and cheese prepared by a food processing plant that meets requirements of law only if served in single serving commercially packaged original containers;
(4) juices and condiments including jams, jellies,
sugar, salt and pepper served in single serving commercially packaged original containers or juices may be served from a bulk mechanical dispenser, if appropriate warewashing is available;
(5) non-ready-to-eat whole, uncut, raw fruits, such as bananas, grape fruit, or oranges that require peeling of rind by the consumer before consumption; and
(6) ready-to-eat, whole, raw, uncut fruits such as apples and/or grapes where the peel is consumed along with the meat of the fruit. Any additional items, other than those listed, will require a food service permit in accordance with the Department's rules and regulations governing food service establishments Chapter 511-5-14 or any future subsequent Chapters adopted thereafter.

(e) **“County Board of Health"** means the County Board of Health established pursuant to O.C.G.A. Section 31-3-1.

(f) **"Critical item"** means a provision of this Chapter as delineated on the inspection report that, if violated, is more likely than other violations to contribute to food contamination, insanitary conditions, illness or environmental health hazard and may create an imminent health hazard.

(g) **"Department" or “DPH”** means the Department of Public Health (DPH).

(h) **"Dependent trailer"** means a trailer or recreational vehicle (RV) which is dependent upon a service building housing shower/ toilet facilities.

(i) **“Detached cabin”** means, for the purpose of installing and operating a portable spa on the premises, a separate dwelling having no wall in common with another dwelling or building. The cabin as part of a tourist accommodation shall be rented as an entire unit, not by individual rooms.

(j) **"Employee"** means any person engaged in the operation of a tourist accommodation whether compensated or not.

(k) **"Food"** means a raw, cooked, or processed edible substance, ice, beverage, or ingredient used or intended in whole or in part for human consumption, or chewing gum.

(l) **"Food-contact surface"** means a surface of equipment or a utensil with which food normally comes into contact or a surface of equipment or a utensil from which food may drain, drip, or splash into a food or onto a surface normally in contact with food.

(m) **"Food processing plant”** means a commercial operation that manufactures, packages, labels, or stores food, and provides food for sale or distribution to other business entities such as food processing plants, retail food sales, or food service establishments.

(n) **"Food service”** means a facility that shall comply with provisions of O.C.G.A. Chapter 26-2 Art. 13 and the rules, regulations and standards adopted thereunder.

(o) **"Health Authority"** means the County Board of Health if functioning in the administration and enforcement of O.C.G.A. Chapter 31-28 and the rules, regulations and standards adopted thereunder by the Department and subject to supervision and direction by the Department; and if not so functioning, the Department.

(p) **“Housekeeper’s cart”** means a cart which is used to transport cleaning materials, room supplies, clean and soiled linens and refuse.

(q) **“Hydromassage bathtub”** means a permanently installed bathtub fixture designed to be filled with each use and equipped with a recirculation piping system, a pump and associated controls. It is designed so it can accept, circulate and discharge water upon each use. It does not contain a disinfection or filtration system.

(r) **"Imminent health hazard"** means a product, practice, circumstance, event or condition that requires immediate correction or cessation of operation in order to prevent a significant threat of danger or death, injury or illness.

(s) **"Independent trailer"** means a trailer or recreational vehicle (RV) which has a holding tank for waste and/or can be connected directly to a sewer connection.

(t) **"Law"** means applicable local, state, and federal statutes, regulations, and ordinances.

(u) **"Lodging"** means a temporary sleeping accommodation, with or without independent kitchenettes, offered to tourists, travelers or guests travelling from one place to another, stopping overnight or otherwise in need of a temporary place to stay.

(v) **"Non-ready-to-eat fruit"** means whole uncut, raw fruit, such as oranges, grapefruit, and bananas in which the peel must be removed by the consumer before the meat of the fruit is consumed.

(w) **"Non-permanent structure"** means any structures such as buildings, tents, park trailers or cabins that can be removed from the premise of a tourist accommodation and they are not restrained from removal by foundation or utilities, without internal plumbing, dependent upon central shower/toilet buildings for tourist personal hygiene and sanitation purposes, and are maintained, offered, or used for dwelling or sleeping quarters.

(x) **"Operator"** means the person who has the duty and responsibility of overall management of the tourist accommodation which includes maintaining a sanitary facility, providing guest services and training employees, or his/her representative, or person in charge.

(y) **"Packaged"** means bottled, canned, cartoned, securely bagged or securely wrapped, as packaged in a food processing plant. It does not include a wrapper, carry-out box or other nondurable container used to containerize food with the purpose of facilitating food protection during service and receipt of the food by the consumer.

(z) **"Park trailer** " means a recreation vehicle primarily designed as temporary living quarters for recreation, camping or seasonal use, built on a single chassis, mounted on wheels, with a gross trailer area not exceeding 400 square feet in the set-up mode, and certified by the manufacturer as complying with ANSI A119.5.

(aa) **"Permit"** means the DPH document issued by the Health Authority that authorizes a person to operate a Tourist Accommodation and signifies satisfactory compliance with this Chapter.

(bb) **"Person"** means any individual, partnership, corporation, or association.

(cc) **"Person in charge"** means the individual present in a tourist accommodation establishment who is the owner, supervisor, manager or owner's designated representative of the tourist accommodation establishment present at the time of the inspection. The person shall be knowledgeable of the responsibilities in the chapter and have access to facilities on the premises.

(dd) **“Portable spa unit”** means a factory fabricated unit consisting of a water holding vessel with all water-circulating, filtration, heating and control equipment integral to the unit. Equipment can include pumps, air blowers, heaters, lights, controls and disinfection and filtration systems. These portable spas are intended for residential use.

(ee) **“Potentially hazardous food (time/temperature control for safety food)”** means a food that requires time/temperature control for safety to limit pathogenic microorganism growth or toxin formation. Refer to Rule.01 within the Department’s rules and regulations governing food service establishments Chapter 511-5-14 or future subsequent Chapters adopted thereafter.

(ff) **"Premises"** means and includes all physical buildings, appurtenances, parking lots, drive ways and all property used by the tourist accommodation.

(gg) **“Primitive campsite”** means a site in an undeveloped section of private or public land with no developed facilities or amenities such as water, electricity or toilets/shower facilities, where campers are expected to leave little or no evidence of human visitation.

(hh) **"Preparation of food"** means to put together or make by combining ingredients and processing food for consumption by the consumer.

(ii) “**Ready-to-eat food”** means food that is in a form that is edible without additional preparation to achieve food safety. It includes the following:
1. All potentially hazardous food (time/temperature control for safety food) that is cooked to the temperature and time required for the specific food;
2. Raw fruits and vegetables that are washed;
3. Fruits and vegetables that are cooked for hot holding;
4. Plant food for which further washing, cooking, or other processing is not required for food safety, and from which rinds, peels, husks, or shells, if naturally present have been removed;
5. Substances derived from plants such as spices, seasonings, and sugar;
6. A bakery item such as bread, cakes, pies, fillings, or icing for which further cooking is not required for food safety;
7. The following products that are produced in accordance with USDA guidelines and that have received a lethality treatment for pathogens: dry, fermented sausages, such as dry salami or pepperoni; salt-cured meat and poultry products, such as prosciutto ham, country cured ham, and Parma ham; and dried meat and poultry products, such as jerky or beef sticks; and
8. Foods manufactured as specified in 21 CFR Part 113, Thermally Processed Low-Acid Foods Packaged in Hermetically Sealed Containers.

(jj) **“Ready–to-eat fruit”** means whole raw, uncut, fruits, such as apples and/or grapes, that have been washed prior to service and the meat and the peel is normally consumed by guest.

(kk) **“Recreational vehicle (RV)”** means a vehicle designated for temporary living quarters for camping, travelling, or recreational use. It may have its own motor, or be mounted on or pulled by another vehicle.

(ll) “**Recreational vehicle park or campground**” means an accommodation for recreational vehicles or other camping outfits where an individual site is rented, and the intent of the park or campground is not to establish permanent residences.

(mm) **"Residential kitchen"** means a kitchen within a bed and breakfast inn used for the owners’ private use as well as preparation of a breakfast meal for tourists.

(nn) **"Restricted use pesticide"** means a pesticide product that contains the active ingredients specified in 40 CFR 152.175 (Pesticides classified for restricted use), and that is limited to use by or under the direct supervision of a certified applicator.

(oo) **"Sanitization"** means the application of cumulative heat or chemicals on cleaned food contact surfaces that, when evaluated for efficacy, is sufficient to yield a reduction of 5 logs, which is equal to a 99.999% reduction, of representative disease microorganisms of public health importance.

(pp) **"Sealed”** means free of cracks or other openings that allow the entry or passage of moisture.

(qq) **"Sewage"** means liquid waste containing animal or vegetable matter in suspension or solution and may include liquids containing chemicals in solution.

(rr) **“Single-service articles”** means tableware, carry-out utensils, cups, containers, lids or closures, plates, napkins, doilies, bags, containers, toothpicks, knives, forks, spoons, stirrers, paddles, straws, wrapping materials, and similar utensils that are intended to be discarded after one use.

(ss) **“Single-serving”** is food intended to be eaten by one person in one sitting and commercially packaged in a container intended to be discarded after one use.

(tt) **"Smooth"** means a surface that has no roughness or projections that render it difficult to cleanor maintain in a sanitary condition.

(uu) **"Tourist Accommodation"** means any facility consisting of two or more rooms or dwelling units providing lodging and other accommodations to the general public, such as tourist courts, tourist cottages, tourist homes, trailer parks, trailer courts, motels, motor hotels, hotels, and any similar place by whatever name called and any food, beverage, laundry, recreational or other facilities or establishments operated in conjunction therewith. This definition includes any facility consisting of two or more rooms or dwelling units either joined together or separate on a common piece of property, furnished for pay and further includes campgrounds, recreational vehicle parks and bed and breakfast inns. A tourist accommodation is not a facility intended for permanent residence, or a facility available only to members of a club or through private lease or invitation.

(vv) **"Tourist”, "Traveler," or “Guest”** is defined as anyone who visits a Tourist Accommodation for the purpose of lodging, meals, or entertainment .

(ww) **"Trailer"** means any trailer coach, recreational vehicle (RV), park trailer or other similar unit designed for temporary dwelling or sleeping purposes.

(xx) **"Trailer space"** means a plot of ground within a trailer and/or recreational vehicle park designated for the accommodation of one trailer or recreational vehicle (RV).

(yy) **"Utensil"** means a food-contact implement or container used in the storage, preparation, transportation, dispensing, sale, or service of food, such as kitchenware or tableware that is multiuse, single-service, or single-use; gloves used in contact with food; temperature sensing probes of food temperature measuring devices; and probe-type price or identification tags used in contact with food.

(zz) **"Warewashing"** means the cleaning and sanitizing of utensils and food-contact surfaces of or equipment.
[Authority: O.C.G.A. §§ 31-2A-6 and 31-28-5]

15-4 Tourist Accommodation Permits.

(1) **Permit:**
(a) Any person operating a tourist accommodation shall obtain and display a valid DPH tourist accommodation permit issued by the Health Authority.
(b) To qualify for a permit, an applicant shall:
1. Be an owner of the tourist accommodation;
2. Allow access to the tourist accommodation;
3. Provide all information as required on the application and pay all applicable local and state fees referenced in DPH Rule 511-6-2-.22 at the time the application is submitted and;
4. Score 100% on the permitting inspection for newly constructed facilities.
(c) Prior to the issuance of a tourist accommodation permit to new or existing establishments, the applicant shall provide evidence of satisfactory compliance with the provisions of this Chapter and all other provisions of laws that apply to the location, construction and maintenance of tourist
accommodation establishments and the safety of persons therein. At the request of the Health Authority, a permit holder of a tourist accommodation may be requested to show evidence of continued compliance with provisions of law that apply to the location, construction and maintenance of tourist accommodations and the safety of persons therein.
(d) Application for a permit to operate such tourist accommodation shall be made in duplicate upon forms provided by the Department. Such forms shall be completed in all details and signed by the applicant or authorized agent and submitted at least ten days before the scheduled opening. The original shall be filed with the Health Authority.
(e) Upon receipt of an application for permit the Health Authority shall review the application and shall take action to approve or deny the permit as is provided in accordance with the provisions of O.C.G.A. Chapter 31-28 and these regulations.
(f) The Health Authority shall grant the permit or write a statement detailing the reasons for denial. The permit or statement shall be forwarded to the tourist accommodation operator.
(g) Permits shall expire upon change of ownership, location, or change in type of operation. A “change of ownership” means the transfer of a 50% interest or greater in the Tourist Accommodation to a person or entity not holding a current interest. In addition, once a Tourist Accommodation permit has been issued by the Health Authority, any significant or material change of the Tourist Accommodation’s physical layout that

would alter the interior or exterior structural blueprint of the facility may invalidate the permit. Unless prior approval has been obtained from the Health Authority, the facility shall maintain the physical layout shown within the approved plans and specifications of the Tourist Accommodation at the time of permit issuance. Operators shall notify the Health Authority before any structural, material or equipment changes to obtain approval if necessary.
(h) The permit shall be void when the tourist accommodation ceases to operate or moves to another location. The operator shall be responsible for notifying the Health Authority when the Tourist Accommodation ceases to operate and for removing the invalid permit from the facility.

(2) **Plans and Specifications.** Plans and specifications for remodeling tourist accommodations and construction of new tourist accommodations must be submitted for review and approval fourteen days prior to beginning construction. The plans shall indicate the proposed layout and arrangement of rooms in the establishment and what each is to be used for. Mechanical and plumbing details must be shown as well as construction materials to be used on floors, walls and ceilings. Additional plans for a kitchen will be required if food is to be prepared and served to guests. The plans shall indicate the proposed menu or list of foods to be served, floor plan layout, arrangement of equipment, HVAC and plumbing, construction materials and finish schedule, the type and model of proposed fixed equipment and facilities and the anticipated service volume per day. If swimming pools or spas are planned, properly prepared plans and specifications must be submitted to the local Health Authority for review, approval, and issuance of a construction permit as per applicable rules and regulations governing public swimming pools. If no construction changes are to be made to an existing building, requirement for plans will be at the discretion of the Health Authority.

(3) **Private Camps.** Camps or facilities owned and operated for members only may be inspected at the Health Authority's discretion or upon request by the owner or operator or by complaint.

(4) **Primitive Campsites**. These campsites shall be inspected only at the discretion of the Health Authority.
[Authority: O.C.G.A. §§ 31-2A-6 and 31-28-5]

15-5 Inspections.
(1) Tourist accommodations shall be subject to inspection at reasonable hours no less than twice annually and as often as is deemed necessary by the Health Authority to ensure adequate compliance with the provisions of these rules. The permit holder is responsible for providing a person or persons at the time of inspection who are authorized and able to provide access to all rooms, facilities and records of the tourist accommodation, and who can demonstrate that there is sufficient daily oversight of employees and routine monitoring of operations to ensure the following:

(a) Employees adhere to standard procedures or rules in the chapter when performing essential services such as linen exchange, sanitizing facilities or multiuse utensils, washing laundry, housekeeping and providing food in compliance for tourists, travelers and guest lodging or visiting the facility for other purposes;

(b) Employees are preventing cross-contamination of clean linen, towels or glassware in transport or storage by separating items, using designated containers and properly storing items after cleaning and sanitizing;

(c) Employees are preventing cross-contamination of ready-to-eat food with bare hands by properly using suitable utensils such as deli tissue, spatulas, tongs, single-use gloves, or dispensing equipment;

(d) Employees are properly cleaning and sanitizing multiuse utensils by monitoring temperature and exposure time for hot water sanitizing or chemical concentration, pH and temperature for chemical sanitizing;
(e) Employees of a bed and breakfast inn are properly cooking potentially hazardous food (time/temperature control for safety food), being particularly careful in cooking those foods known to cause severe foodborne illness and death, such as eggs and comminuted meats and conduct routine monitoring of the cooking temperatures using appropriate temperature measuring devices properly scaled and calibrated;

(f) Employees are using proper methods to hold potentially hazardous foods (time/temperature control for safety food) hot or cold for consumption;

(g) Employees are informed of their responsibility to report to the person in charge, information about their health and activities as they relate to diseases that are transmissible through food; and contact with multiuse utensils and;

(h) If an imminent health hazard exists, misuse of poisonous or toxic materials, onset of an apparent illness or outbreak, gross insanitary condition, or other circumstances that may endanger public health, then operations in the affected area shall be immediately discontinued by the person in charge and the Health Authority notified.

(2) The operator may accompany the Health Authority representative on tours of inspection, shall be given the opportunity to sign the completed inspection report and retain a copy for the tourist accommodation's file.

(3) The signature of the operator shall not mean his agreement with all of the findings recorded thereon, but only that he or she has received the report and the notification of alleged noncompliances with the rules.

(4) The results of the inspection shall be recorded on a form provided by the Department. This report will show violations found, corrective actions necessary for compliance with this rule, date of inspection, signature of person performing the inspection and the date when corrections to violations must be completed. If three or more critical item violations are found and recorded on a tourist accommodation inspection report form, then a re-inspection will be required within 60 days.
Critical violations shall be corrected immediately, within 24 hours, or the Health Authority shall be authorized to close or restrict access to any area of the premises found in violation of critical item(s) on the official inspection record. Such areas shall be closed until the violations have been corrected or abated as determined by the Health Authority using the requirements in Rule .20.

(5) The operator shall correct other violations at time of inspection, if warranted, or within 30 days of the inspection report date. The Health Authority may extend the 30 days if an

operator requires additional time to remove a violation based on a written plan of correction.

(6) The report shall be discussed and explained at the time of inspection with the tourist accommodation operator or if not present, the designated person in charge.

(7) The most recent tourist accommodation inspection report form shall be prominently displayed in public view at all times, between five feet and seven feet from the floor and in a public area such as the registration desk, where it can be read at a distance of one foot away.

(8) Any tourist accommodation inspection report addendum(s), completed by the Health Authority to document observations, violations, and corrective actions resulting from an inspection need not be displayed, but must be made available by the tourist accommodation operator to the public upon request.

(9) The Health Authority shall review all reports on reinsertion and shall institute such action as is deemed necessary to ensure compliance with the provisions of O.C.G.A. Chapter 31-28.
[Authority: O.C.G.A. §§ 31-2A-6 and 31-28-5]

15-6 Employee Health and Safety.

(1) No person affected with any disease in a communicable form, boils, infected wounds, or sores, or while a carrier of a communicable disease shall work in any area of a tourist accommodation in any capacity in which there is a likelihood of such a person contaminating bedding and other surfaces with pathogenic organisms or transmitting disease to other individuals and no person known or suspected of being affected with any such disease or condition shall be employed in such an area or capacity. When there is reason to suspect that an employee has contracted any disease in communicable form or has become a carrier of such a disease, the employee shall be removed from the tourist accommodation premises; or his or her service is restricted to some area of the establishment where there would be no danger of transmitting disease.

(2) Employees, other than clerical employees, shall thoroughly wash their hands and the exposed portions of their arms with soap and warm water before starting work, during work as often as necessary to keep them clean and after smoking, eating, drinking or using the toilet. Employees shall keep their fingernails clean. Employees shall maintain a high degree of personal cleanliness and conform to other good hygienic practices.
[Authority: O.C.G.A. §§ 31-2A-6 and 31-28-5]

15-7 Water Supply and Sanitizing.
(1) The water supply shall comply with all Federal, State and local laws and/or ordinances related to safe drinking water. The following shall apply as well:

(a) A public water system must be used by any tourist accommodation that regularly serves an average of twenty-five trailer spaces or guestrooms daily for at least sixty days out of the year. This applies to such places as hotels, motels, trailer parks or cottages.

(b) A nonpublic water system serving less than twenty-five trailer spaces or guestrooms, must be constructed, maintained, and operated according to applicable state and local codes and procedures, as amended.

(2) Cold running water under pressure shall be provided to all equipment that uses water. Hot and cold running water under pressure shall be provided to all lavatories, bathing facilities, laundry facilities, and water-using equipment where eating and drinking utensils are washed. In all new tourist accommodations, and where possible in existing tourist accommodations, hot water in all guest rooms shall not exceed 120_0F.

(3) The water supply shall be protected so as to preclude the possibility of back siphonage. Below grade stop and wastes cocks or hose bibs shall not be used.

(4) Hoses used for filling trailer water tanks shall be stored under sanitary conditions, used for no other purposes, and handled so that back siphonage cannot occur and contaminants will not be introduced into the trailer's water tank. A hose connected to a potable water service outlet that is intended for human consumption must not be long enough to reach any wastewater dump station.

(5) Water glasses, ice buckets and other multi-use utensils provided for tourist's use in a guestroom or dwelling unit shall be washed, rinsed, and sanitized, in a 3-compartment, warewashing sink dedicated for that purpose only. They shall be thoroughly cleaned in the first compartment in a warm soapy solution; rinsed clean of soap and debris in warm clean water in the second compartment; and sanitized as specified in subsection (5) (d) 1, 2, 3, 4, and 5 using chemical sanitizers or sanitized by hot water as specified in subsection (5) (e), after each occupancy and as needed during occupancy. Where approved sanitizing methods are not provided, single service and single use articles, such as paper or plastic cups shall be made available in lieu of glasses and shall be discarded after one use. In lieu of sanitizing ice buckets, a sanitary, food grade, plastic bag, large enough to line the bucket and overlap the top edge may be provided for use by a single occupant.

(a) In addition to a dedicated 3-compartment warewashing sink, a commercial warewasher may be utilized if certified by ANSI/NSF as meeting standard 3 or equivalent for commercial warewashing equipment and it is maintained in good repair and operating according to its manufacturer's specifications.

(b) If a warewasher is provided in the room of the tourist accommodation, or if the operators provide a non-commercial warewasher (i.e. dishwasher) to clean and sanitize multi-use equipment and utensils between room occupancies, then the machine must comply with the following:

1. The warewasher must be able to remove all physical soil from all surfaces of dishes and;
2. Be equipped with a high temperature rinse cycle such as a sani-cycle and all cycles on the machine must be used (prewash, wash, sanitizing rinse) and be certified by NSF standards or;
3. If no high temperature rinse cycle is provided, the hot water supplied to the machine must be at a minimum of 155º F (68º C). The operator shall use a maximum registering thermometer or a heat thermal label to assure that the sanitizing rinse water temperature is a minimum of 155ºF (68ºC). The operator must record quarterly each warewasher temperature reading for review at the discretion of the Health Authority.

(c) The warewasher must be installed and operated according to manufacturer's instructions for the highest level of sanitization possible when sanitizing kitchen facilities'

utensils and tableware. A copy of the instructions must be available on the premises at all times.
(d) A chemical sanitizer used in a sanitizing solution for a manual or mechanical operation at exposure times specified under this subsection shall meet the requirements specified in 40 CFR 180.940 Tolerance exemptions for active and inert ingredients for use in antimicrobial formulations (food-contact surface sanitizing solutions), shall be used in accordance with the Environmental Protection Agency (EPA)-approved manufacturer's label use instructions, and shall be used as follows:

1. A chlorine solution shall have a minimum temperature based on the concentration and pH of the solution as listed in the following chart;

Minimum Concentration MG/L	Minimum Temperature PH 10 or less °C (°F)	PH 8 or less °C (°F)
25	49 (120)	49 (120)
50	38 (100)	24 (75)
100	13 (55)	13 (55)

2. An iodine solution shall have a minimum temperature of 75ºF (24ºC), minimum concentration between 12.5 ppm and 25 ppm, and pH of 5.0 or less or a pH no higher than the level for which the manufacturer specifies for the solution to be effective;
3. A quaternary ammonium compound solution shall have a minimum temperature of 75ºF (24ºC), have a concentration as specified in 40 CFR 180.940 Tolerance exemptions for active and inert ingredients for use in antimicrobial formulations and as indicated by the manufacturer’s use directions included in the labeling, and be used only in water with 500 ppm hardness or less or in water having a hardness no greater than specified by the manufacturer’s label;
4. If another solution of a chemical specified under 1 - 3 of this subsection is used, the permit holder shall demonstrate to the Health Authority that the solution achieves sanitization and the use of the solution shall be approved; or
5. If a chemical sanitizer other than chlorine, iodine, or a quaternary ammonium compound is used; it shall be applied in accordance with the manufacturer's use directions included in the labeling.
6. The operator shall provide a test kit or device that measures the sanitizing agent’s concentration in the solution. Each time a user replaces the solution; they shall measure the concentration of the sanitizer in parts per million.
(e) Hot water may be used to sanitize glasses, ice buckets and other multi-use utensils in a 3-compartmented, warewashing sink, after they have been thoroughly cleaned in the first compartment in a warm soapy solution; and then rinsed clean of soap and debris in clean warm water in the second compartment. These items will then be immersed for at least 30 seconds in water at a temperature of 171°F (77°C) or above and then air-dried before use and/or storage. (6) Single- service items placed in a guestroom or dwelling units shall be commercially prewrapped to protect against contamination. Water glasses shall be inverted on a clean surface or covered with a single-service lid and other multi-use utensils shall be protected from contamination in a manner approved by the Health Authority. Equipment, utensils, dishes, etc. in kitchenettes provided for guest use shall be kept clean and sanitized between each tourist’s occupancy. If kitchenettes are provided for tourist use, then dishwashing detergent shall be made available for tourist use.

(7) Drinking founts shall be constructed of impervious material and shall have an angle-jet nozzle above the overflow rim of the bowl. The nozzle shall be protected by a non-oxidizing guard and the bowl shall be constructed of an easily cleanable material.
(8) If self-service ice is provided, then it shall be from an approved water supply. In all new tourist accommodations, and in existing tourist accommodations when machines are replaced, only automatic dispensing ice machines will be allowed. In existing tourist accommodations permitted prior to the adoption of this rule, the use of existing self-service ice-storage bins may be continued, provided that the machines are maintained in good repair and capable of being properly cleaned and sanitized according to the manufacturer's recommendations. Further, a copy of the manufacturer's cleaning instructions shall be maintained onsite for review at the request of the Health Authority. Scoops, ice buckets, and other ice handling equipment, shall be of easily cleanable material and construction. They shall be stored in a clean place and shall be kept clean. Glassware shall not be used to scoop ice.
[Authority: O.C.G.A. §§ 31-2A-6 and 31-28-5]

15-8 Toilet Facilities.
(1) Toilet, lavatory, and bathing facilities shall be provided at all tourist accommodations except as provided in paragraphs (13) and (16) of this Rule. Such facilities shall be easily accessible, convenient and available to patrons at all times.
(2) Bedrooms in permanent structures shall be provided with private or connecting baths. Central toilet facilities may be used to serve bed and breakfast inns and existing multi-storied tourist accommodations; so long as, toilet facilities are within the building, located on each floor, and deemed adequate by determination of the Health Authority to serve the tourists therein.
(3) Bedrooms in non-permanent structures such as cabins, park trailers, or structures in a wilderness settings used to provide lodging shall be provided with access to central toilet/shower building.
(4) Toilet rooms and fixtures must be smooth and nonabsorbent and shall be kept clean and in good repair. Walls, floors, and ceilings shall be constructed of easily cleanable nonabsorbent materials and shall be kept clean and in good repair. While being used by tourists, every surface of a bathtub, shower, shower enclosure, toilet and lavatory, which may come in contact with a person's body, must be sanitized each day, unless the guest has declined regular tourist room services. If a tourist declines regular tourist room services, the tourist accommodation facility must ensure that these surfaces are cleaned and sanitized at least once per week and between tourists.
(5) Toilet, lavatory and bathing facilities shall be mechanically ventilated. Where ventilation ducts are used, ducts from toilet rooms shall not be connected into return ventilation ducts to any other room. In existing tourist accommodations permitted prior to the adoption of this rule, the current ventilation must prevent odor, mold, mildew, and moisture. All new or major renovation of a tourist accommodation will require mechanical ventilation to be installed to the outside of the building separate from heating and air-condition systems.
(6) Toilet rooms, lavatories and bathing facilities shall be provided with soap, artificial light, and hot and cold water under pressure.
(7) Unused, individually wrapped soap or liquid soap dispensed from approved containers shall be provided in guest rooms. Soap furnished in public wash rooms or baths shall be dispensed from approved containers designed to preclude contamination of the contents by individual contact.
(8) Clean laundered individual towels shall be provided for each occupant in tourist rooms. Used or soiled towels shall be exchanged with clean towels and laundered

between each occupancy and at the request of the customer. If fabric bath mats are provided, they shall be laundered or cleaned after each occupancy. Towels, whenever provided in public wash rooms or baths, shall be individual towels and if cloth shall have been laundered since last used.
(9) Toilet tissue shall be provided in a dispenser at each toilet at all times.
(10) Anti-slip tubs slip strips, appliqués, or slip-proof mats shall be provided in each bathing facility and shall be kept clean and in good repair.
(11) When used, hydromassage bathtubs shall be installed in accordance with the applicable codes. The recirculation piping system for a hydromassage bathtub shall be cleaned in accordance with the manufacturer instructions. Further, the manufacturer's cleaning instructions shall be available on-site for examination at the request of the Health Authority. Fresh potable water must be provided with each use.
(12) Where dependent trailers are located, central toilet/shower buildings shall be provided and sized to meet the expected guest load based upon the number of trailer spaces or fraction thereof.
(13) If the independent trailer sites are served by sewer connections, then it is not necessary for independent trailer sites to have access to central toilet/shower buildings. However, if such facilities are not provided, a sign with at least 2-inch high lettering shall be posted at the main entrance to the establishment notifying dependent trailer owners that central toilet/shower facilities are not available.
(14) Central Toilet/Shower Buildings shall meet at least the following minimum requirements:
(a) They shall be provided with separations for each sex with no interconnection. All rooms and parts of the central toilet/shower building shall be well-lighted, drained, ventilated to control odor, mold and mildew and of good construction with impervious materials. They shall be developed and planned in consultation with the Health Authority and designed so that good sanitation can be maintained throughout the building at all times. Every surface of a bathtub, shower, shower enclosure, toilet and lavatory which may come in contact with a person's body must be sanitized each day.
(b) Handicapped accessible toilet, shower, and lavatory facilities shall be designed and provided in accordance with state or local requirements and can be included as part of the required total number of water closets, shower heads, lavatories, etc.
(c) Central toilet/shower building shall be plainly identified with signage of at least 2-inch high lettering and located within 200 feet of dwelling units or trailer spaces served.
(d) When serving dependent trailers, central toilet/shower buildings shall be provided for each ten trailer spaces or fraction thereof with not less than one commode, one lavatory and one tub or shower head for each sex. In addition, at least one urinal shall be provided in each central toilet designated for men.
(e) When serving non-permanent structures, a central toilet/shower building shall be provided for each ten non-permanent structure, or fraction thereof, with not less than one commode, one lavatory and one tub or shower head for each sex. In addition, at least one urinal shall be provided in each central toilet designated for men.
(f) If partitions are provided between portions of the dressing room area, screen partitions, shower, toilet, and dressing room booths shall be of durable material not subject to damage by water and shall be designed so that a waterway is provided between partitions and floor to permit thorough cleaning of the walls and floor areas with hoses, mops and brooms.
(g) Hot and cold water under pressure shall be provided at all lavatories and showers.
(h) Floors of central toilet/shower buildings shall be free of joints or openings and shall be continuous throughout the areas. Floors shall have a slip-resistant, nonabsorbent surface that shall be relatively smooth to ensure thorough cleaning. In all newly

constructed, remodeled or renovated facilities, floor drains shall be provided and floors shall be sloped not less than oneeight inch (1/8") per foot toward the drains to ensure positive drainage.
(i) In all newly constructed, remodeled or renovated facilities, an adequate number of threefourths inch (3/4") hose bibbs shall be provided for flushing down the central toilet facility interior.
(j) Soap dispensers for providing either liquid or powdered soap shall be provided at each lavatory. Shampoo dispensers for shampoo shall be provided for each shower head. These dispensers shall be of all metal or plastic type with no glass. They shall dispense their contents in such a manner that precludes contamination of the contents by individual contact.
(k) At least one paper towel dispenser or hand blow dryer shall be provided for every three lavatories.
(l) An unbreakable mirror shall be provided over each lavatory.
(m) Toilet paper holders shall be provided at each water closet.
(n) Soap, paper towels, and toilet tissue shall be provided in all dispensers.
(o) Fixtures shall be installed in accordance with local plumbing codes and shall be properly protected against back-siphonage.
(p) Fixtures shall be designed so that they may be readily and frequently cleaned and disinfected. Frequent cleaning and disinfecting shall not cause damage.
(q) At least one trash receptacle will be available in toilet areas.
(15) In all newly constructed, remodeled or renovated facilities, at least one service sink or one curbed cleaning facility equipped with a floor drain shall be provided and shall be conveniently located for the cleaning of mops or similar wet floor cleaning tools and for the disposal of mop water and similar liquid waste. Service sinks or curbed cleaning facilities may be located in central toilet/shower buildings servicing non-permanent structures or dependent trailer parks.
(16) Remote, primitive, or wilderness campsites may not be required to provide toilet facilities at the discretion of the Health Authority. If toilet facilities are not provided, then a sign shall be posted at the main entrance notifying campers of what facilities are or are not available.
[Authority: O.C.G.A. §§ 31-2A-6 and 31-28-5]

15-9 Sewers.
(1) Sewers shall be designed in accordance with recognized engineering practices for the estimated sewage flow and shall be laid with watertight joints to a grade that will ensure a selfcleaning velocity. Sewers shall be constructed of durable materials properly vented and shall be installed at sufficient depth to withstand anticipated loads or other equally suitable means for protection of the pipe shall be used.
(2) Each independent trailer space shall be provided with a sewer connection not less than three inches in diameter. The design of these sewer connections shall be such that a watertight junction will be made with the trailer outlet. Each sewer connection shall be so constructed that it can be closed and when not in use shall be capped to prevent escape of odors.
(3) Facilities with independent trailer spaces may use a properly sized dump station for sewage disposal with a properly sized central toilet/shower building built in accordance with DPH Rule .08(5), (12), (14) and (15).
(4) Dump stations' connection to sewage disposal shall be as according to DPH Rule .10 of this Chapter.
(5) Minimum design and specifications for dump stations shall be as follows:

(a) Each dump station shall be equipped with a concrete pad surrounding the drain. The concrete pad shall meet all of the following requirements: (See Drawing #1)
1. It shall be a minimum of six feet by six feet in size;
2. It shall be a minimum of six inches in thickness;
3. It shall have a drain opening which is at least four inches in diameter with a foot-operated, selfclosing cap which forms a tight seal with the drain. The drain opening shall be located outside of the wheel travel portion of the pad, and a minimum of 2 feet from any edge of the pad and curbing;
4. It shall have minimum four-inch tall curbing bordering the non-wheel travel area of the pad;
5. All surface drainage must be diverted around and away from pad;
6. The surface of the pad shall slope at least .25 inch per foot from the edge to the drain;
7. Four-inch piping shall run from the drain to either an on-site sewage management system or to a public sanitary sewer system;
8. All plumbing must be in compliance with applicable state and local plumbing codes;
9. A water supply outlet for wash down shall be provided with a water source that is protected from backflow and back-siphonage, and with a retractable spring coiled water delivery device or other system approved by the Health Authority. Hoses used for flushing the dump station pad shall not exceed the length necessary to reach the entire pad; and
10. Drain must include ability to receive wash down water from the pad.
(b) Each dump station shall be easily accessible to the entrance and exit area of the tourist accommodation and have safe, all weather access roadway that slopes away from the dump station pad.
(c) Each dump station shall be properly sealed to prevent nuisances.
(d) Each dump station shall be posted with signs that are clearly and indelibly labeled stating instructions for use with minimum one inch tall lettering. These signs must be at least 2 feet from pad. The signs shall include the statement in at least 1-inch high lettering, **"Georgia law prohibits dumping sewage from recreational vehicles, camper trailers, and other holding tanks onto the ground. The water supply at this location is to be used for flushing and cleaning purposes only, and not for human consumption."**
(e) Each dump station shall be maintained in a clean and functional manner by the tourist accommodation operator.
(f) Existing facilities with dump stations not in compliance with the design criteria in this Rule shall bring their dump station into compliance with the requirements of subsection (5) of this Rule when the station is repaired or renovated, or upon change of ownership. This exception does not exclude any requirement to maintain the dump station to prevent a public health nuisance or hazard.
(6) Each dump station shall have an available water supply for the flushing of dump station areas and the following shall apply: (See Drawing #2)
(a) Each dump station shall be constructed and operated so as to protect the water supply and all other water outlets within the tourist accommodation from contamination due to backflow in accordance with DPH Rule 511-6-2-.11.
(b) Any hose or sprayer must be long enough to allow for a person to operate the drain opening while spraying the pad area.
(c) The washing water supply towers, connections, hoses and other parts must be colored red. Under no circumstances shall the tourist accommodation operator allow a hose that is long enough to reach a water outlet that is used for human consumption to be connected to a water service outlet at a dump station.

(d) Each dump station shall be located such that any water source or service outlet used for filling water tanks or other uses for human consumption is at least fifty feet away from the dump station facility.

Drawing #1

Drawing #2
Note: Waste piping will be not less than 4 inches in diameter unless specified by applicable law.
[Authority: O.C.G.A. §§ 31-2A-6 and 31-28-5]

\
15-10 Sewage Disposal.
(1) Connection shall be made to a public or community sewage treatment system when such system is available within two hundred feet of the property line, or available in a public right-of-way abutting the property.
(2) Where public sewers are not available, as determined by the local governing agency, sewage disposal shall be provided to effectively dispose of all water carried wastes in a sanitary manner. No sewage, waste water, or other liquid effluent shall be discharged in such manner as to enter surface or subsurface water except following a treatment process approved prior to construction in conformity with existing State and local laws or by other means approved by the Health Authority. Such sewage disposal systems shall be constructed and maintained in a manner to prevent the creation of unsanitary conditions. The Health Authority may approve existing private sewage disposal systems giving satisfactory service.
(3) When central toilet/shower buildings are provided on the premises of a tourist accommodation, a dump station must be installed and sized based on the total number and type of trailer sites to be served and projected sewage flow, and all in accordance with local codes.
[Authority: O.C.G.A. §§ 31-2A-6 and 31-28-5]

15-11 Plumbing. All plumbing in tourist accommodations shall comply with State and local laws, ordinances or regulations. In the absence of State and local laws, ordinances or regulations, the provisions of the current “International Plumbing Code with Georgia Amendments or future subsequent versions adopted thereafter shall prevail.
[Authority: O.C.G.A. §§ 31-2A-6 and 31-28-5]

15-.12 Garbage and Refuse Disposal.
(1) At least one Health Authority approved indoor container for waste shall be provided for each indoor dwelling unit to be rented. Containers shall be constructed of durable metal or other materials which do not leak, do not absorb liquids and do not support combustion. Such containers shall be thoroughly cleaned on the inside and outside each time they are emptied unless liners are used.
(2) All outside refuse or garbage storage containers shall be constructed of durable metal or other approved types of materials, which do not leak and do not absorb liquids and shall be provided with tight-fitting lids or covers and shall be kept covered when stored. Each container shall be located within 100 feet of dwelling units or trailer spaces or in a location approved by the Health Authority and shall be cleaned at such frequency as to prevent a nuisance or odor.

(3) Adequate cleaning facilities shall be provided and each garbage or recycling storage room, enclosure, or container shall be thoroughly cleaned after the emptying or removal of refuse or garbage. Areas surrounding these rooms, enclosures, and containers shall be kept clean and orderly. Liquid waste resulting from the cleaning of containers shall be disposed of as sewage.
(4) Except for garbage facilities associated with Camp Grounds and Bed & Breakfast Inns, for all newly constructed, remodeled, or renovated establishments, refuse and garbage storage containers must be stored on a properly constructed sealed concrete slab or machine laid sealed asphalt. However, the Health Authority may require storage containers to be on similar properly constructed storage facilities for Camp Grounds and Bed & Breakfast Inns should insanitary conditions warrant such facilities.
(5) Refuse shall be collected in accordance with municipal practices where available. Where such services are not available the tourist accommodation shall dispose of the refuse in compliance with all Federal, State, local laws and or ordinances.
[Authority: O.C.G.A. §§ 31-2A-6 and 31-28-5]

15-.13 Insect and Rodent Control.
(1) Effective and appropriate measures shall be taken to eliminate the presence of rodents and flies, roaches, bed bugs, and other insects on the premises. The premises shall be kept in such condition as to prevent the attraction, harborage or feeding of insects or rodents. Restricted use pesticides, as specified in 40 CFR 152 Subpart I - Classification of Pesticides shall be applied only by a licensed professional. All pesticide applications must be in accordance with current state and federal laws and the product label. Applying pesticides within buildings using area fog dispersal methods or as warranted under DPH Rule-.20(4)(c) is restricted to licensed pest control professionals as part of an integrated pest management program.
(2) A record must be maintained on file and available at request of Health Authority for no less than 18 months of any pesticide use on the premises, except for the occasional use of consumer insect sprays on small spots in accordance with the product label. The record may be made by the permit holder or provided by the applicator, and shall list the following information:
(a) amount and concentration of product used;
(b) name of product used;
(c) date and location of application;
(d) application method;
(e) pest targeted; and
(f) name of applicator.
(3) Openings to the outside shall be effectively protected against the entrance of rodents and insects by tight-fitting doors, closed windows, screening, controlled air currents or other means. Screen doors shall be self-closing and screens for windows, doors, skylights, transoms and other openings to the outside shall be tight-fitting and free of breaks. Screening materials shall not be less than sixteen mesh to the inch. Screen doors for sliding patio doors will not be required to be self closing except in food service, preparation and utensil washing areas of permitted food service establishment kitchens and bed and breakfast inns.
[Authority: O.C.G.A. §§ 31-2A-6 and 31-28-5]

15-14 Construction, Layout and Furnishings.
(1) Floors, walls, ceilings. windows, doors and all other appurtenances shall be of sound construction, properly maintained in good repair and shall be kept clean. In all new constructed and extensively remodeled residential kitchens used in bed and breakfast

inns, coved base molding may be required. Walls and ceilings in residential kitchens shall be easily cleanable and light colored.
(2) Cooking is only allowed within tourist rooms that have been constructed to include permanently installed cooking facilities as approved by the Health Authority and other applicable state and local authorities. This rule does not prohibit coffee makers and microwave ovens belonging to the tourist accommodation.
(3) Ventilation shall be provided for all rooms. Where ventilation is provided by means of windows, they shall open directly to the outside air and the openable window area of each room shall be not less than 1/20 of the floor area served. Where ventilation is provided by other means, it shall comply with the requirements of the current International Mechanical Code with Georgia Amendments or future subsequent revisions adopted thereafter to provide comfortable living conditions, remove objectionable odor and fumes, and prevent excessive condensation. Ventilation systems shall comply with applicable State and local fire prevention requirements and building codes.
(4) All rooms shall be well lighted. When natural light fails to provide sufficient illumination, evenly distributed artificial light shall be provided to maintain a lighting intensity of not less than ten foot candles at 30" above the floor. (5) All furniture, draperies, appliances, carpets, and other accessories, in the tourist accommodation, whether the property of the tourist accommodation owner or not, shall be considered the property of and furnished by the tourist accommodation for purposes of enforcement of this Chapter, and must be maintained in good repair, clean, and free of vermin.
(6) Washable mattress pads or covers shall be used on all mattresses. Beds, mattresses, springs, slats, mattress pads, mattress and bed coverings, pillow and pillow covers shall be clean and free from vermin. Each bed shall be provided, as a minimum, with two sheets and one pillow and pillowcase. After each occupancy and upon the request of the occupant, sheets and pillowcases shall be changed with fresh laundered linens. During occupancy, linens shall be changed at a minimum frequency of not less than weekly.
(7) Sleeping quarters must be separated by a wall from the food preparation, food storage, and food service areas of a bed and breakfast inn.
[Authority: O.C.G.A. §§ 31-2A-6 and 31-28-5]

15-.15 Heating and Fire Safety.
(1) All heating appliances shall be designed and installed to carry all flue gases to the outside of building through the flue outlet.
(2) Unvented combustion type heaters shall not be installed and/or used on the premises, unless they are in compliance with current State of Georgia fire safety codes and installed in accordance with the manufacturer’s recommendations.
(3) All automatic natural gas heating equipment shall be equipped with automatic safety pilot. All liquefied petroleum gas burning appliances shall be equipped with 100% safety cut-off pilot.
(4) Gas water heaters shall not be installed in bathrooms or bedrooms, or in closets connected thereto.
(5) All gas-fired equipment shall be inspected at least annually by a qualified licensed contractor or local fire authority, if available. Points to be inspected are proper construction and installation, malfunctions and adjustments of controls and burners, faulty heat exchangers and vent obstructions. Any defects found on inspection must be corrected by a qualified heating contractor prior to use of the equipment. Upon request, the operator shall provide evidence of inspection and/or correction of any deficiency.
[Authority: O.C.G.A. §§ 31-2A-6 and 31-28-5]

15-.16 Swimming Pools.
(1) Regulations of the Department and/ county in which govern the design, construction, operation and maintenance of swimming pools or spas shall apply to pools and spas operated in conjunction with a tourist accommodation.
(2) If a swimming pool or spa at a bed and breakfast inn cannot comply with applicable regulations, then it must be enclosed with a fence at least four feet in height with a locked gate and used only by family members. In such case, guests shall not be allowed to use swimming pool or spa.
(3) If a portable spa unit is installed and operated on the premises of a detached cabin used for lodging as part of a tourist accommodation and if the owner complies with (4) and (5) of this Rule, then the portable spa will be exempt from (1) of this Rule. The owner must submit appropriate documentation for review and receive written approval from the Health Authority before operation.
(4) **Installation:**
(a) All portable units shall be for individual use by the occupants only and shall be permanently installed outside of the cabin and on the premises of the individual dwelling unit.
(b) If the portable unit is installed in an outside enclosure, then adequate mechanical exhaust ventilation shall be provided to minimize heat and steam accumulation.
(c) The portable unit shall be constructed of a hard non-absorbent material such as fiberglass, acrylic or ceramic tile and provide a slip resistant walking surface. PVC or vinyl-liner materials shall not be used.
(d) Portable units shall be installed in compliance with applicable electrical and plumbing codes.
(e) Portable units shall be installed in accordance with the manufacturer's instructions and applicable wastewater disposal codes.
(f) Portable units shall be equipped to avoid suction entrapment by providing suction outlets with covers that have been tested and approved by a nationally recognized testing laboratory and shall comply with ANSI/ASME A112.19.8-2007, Suction Fittings For Use in Swimming Pools, Wading Pools, Spas and Hot Tubs, or most recent edition.
(5) **Operation:**
(a) Portable units operated as a chamber shall be drained, cleaned, sanitized and refilled prior to the next use.
(b) The unit shall be filled with potable water from an approved source immediately prior to use. The water fill line shall be protected with an approved backflow prevention device.
(c) A thermometer shall be provided to ensure that the water temperature does not exceed 104° F. A sign shall be posted adjacent to the unit stating, “Max. Temp. 104° F.” and list manufacturer’s precautions on use.
(d) The unit shall be completely drained immediately after each use. A drain shall be located at the lowest part of the unit and all plumbing components shall be self-draining. All waste water shall be disposed of in a manner approved by the Health Authority. Wastewater may be discharged into a sanitary sewer through an approved air gap or into an approved subsurface disposal system or by other means approved by the Health Authority.
(e) The operator must provide the guest with the procedures and warnings on spa usage. The spa must remain empty until the tourist request spa services.
(f) Hours of spa services must be defined by the operator.
(g) Written procedures for cleaning and sanitizing shall be provided and maintained by the operator. The sanitizer solution shall be an EPA-registered disinfectant and shall be

recirculated through the jet and/or aeration system in accordance with the disinfectant manufacturer's directions.
(h) Filtration systems and water treatment systems shall be operated according to manufacturer's requirements. Units with these systems shall be located outdoors, unless adequate ventilation is provided in an outside enclosure.
(i) If unit is not located within an outside enclosure, then a protective barrier with a self closing,self latching gate meeting the applicable local or state building code or a cover meeting the applicable ASTM standard shall be used at the facility.
(j) Spas will also be cleaned and sanitized between occupants, and a log documenting cleaning must be maintained onsite, and made readily available at the request of the Health Authority. [Authority: O.C.G.A. §§ 31-2A-6 and 31-28-5]

15-.17 Laundry Facilities.
(1) Where laundry facilities are provided, they shall be separate from other facilities, of sound construction, and shall be kept clean, and in good repair. Laundry rooms for guest use shall be vented to the exterior and well lighted. The tourist laundry equipment provided for tourists to use shall be separate from the tourist accommodation laundry facility. Laundry equipment shall be provided with hot and cold water under pressure. Dryers shall be vented to the outside. A storage area or room shall be required to store clean linens and laundry at least a minimum of 6-inches off the floor and be free of pests, vermin, dust and moisture. If a tourist accommodation does not have an approved laundry facility, the tourist accommodation owner may contract with an approved laundry service provider. In all newly constructed permitted facilities, and existing facilities remodeled or renovated after the adoption of these rules, except for bed and breakfast inn, a floor drain located to receive intentional or accidental drainage from equipment or plumbing shall be required in laundry facilities.
(2) Housekeeper carts shall be so arranged that clean replacement supplies, clean linens, and cleaned and sanitized multi-use equipment and utensils shall be protected from soiled items being removed from each room. Soiled linens and refuse shall be placed in appropriate containers on housekeepers' carts. Any spray bottle used in cleaning a tourist room or stored on the housekeeping cart shall be labeled with its contents. Cleaners and sanitizer shall be used according to the manufacturer's use direction and label.
[Authority: O.C.G.A. §§ 31-2A-6 and 31-28-5]

15-.18 Grounds.
(1) The grounds of a tourist accommodation shall be graded to drain. Serviceable walks and driveways shall be provided.
(2) Grounds, including spaces beneath buildings and trailers, shall be kept clean and free of litter.
(3) All walkways, porches, and hallways shall be maintained in good repair. Only articles necessary to the operation and maintenance of the establishment shall be stored on the premises.
(4) There shall be not less than fifteen feet clear space between all trailers and nearby buildings,nor less than ten feet between trailers and internal driveways within the trailer park.
(5) Each trailer space shall be distinctly marked. Trailer spaces shall abut on a well-defined allweather driveway of not less than twenty feet of unobstructed width and such driveway shall have clear access to a public thoroughfare.
(6) Grounded and weather-proof electrical outlets supplying at least one-hundred- fifteen volts shall be provided at each trailer space. Power lines shall be located underground or

suspended at least eighteen feet above ground. All electrical work and materials shall comply with the applicable International Electrical Code with Georgia Amendments and local laws, ordinances, or regulations.
[Authority: O.C.G.A. §§ 31-2A-6 and 31-28-5]

15-.19 Food Service Options.
(1) **Food Service Establishment.** All food service facilities except for bed and breakfast inns shall comply with provisions of O.C.G.A. Chapter 26-2. Art. 13 and the rules, regulations and standards adopted thereunder. Bed and breakfast inns, and tourist accommodations without a foodservice permit, shall instead comply with this Rule.
(2) **Continental Breakfast.** A tourist accommodation without a food service permit may serve a continental breakfast as defined in DPH Rule 511-6-2-.03(d); foods not requiring preparation and cooking; potentially hazardous foods commercially prepared and packaged in single-servings; non potentially hazardous foods commercially prepared and packaged and served from the original container or an approved dispenser such as bagels or bread that may require only reheating or toasting by tourists, if the conditions of subsections 2(a) through (j) are met. All food items on display must be protected from contamination. Food shall be safe for human consumption, and obtained from sources that comply with applicable laws. (a) A minimum two-compartment sink, large enough to fully immerse the largest utensil used and a refrigerator which can maintain food temperatures at or below 41°F (5°C) shall be required. The need for a refrigerator may be waived if no potentially hazardous foods are served.
(b) Condiments containing potentially hazardous ingredients and milk must be stored in a refrigerator, except for individual, single-service coffee creamers that are non-dairy, and individual, single-service, ultra high pasteurized coffee creamers that are labeled by the manufacturer as not requiring refrigeration.
(c) A thermometer, accurate to (+2ºF (±1ºC) shall be provided in the refrigerator and located to be easily readable.
(d) Only single service disposable plates, cups and utensils shall be used in a continental breakfast operation. However, a facility may use multi-use utensils and/or a mechanical bulk juice dispenser, if the operator provides warewashing equipment to wash, rinse and sanitize all multiuse utensils. At minimum, the operator shall install a three compartment sink large enough to fully immerse the largest utensil used and provide adequate space to air-dry and store the utensils.
(e) Ice used for keeping displayed foods cold must be constantly drained and cannot be used in beverages. If ice is needed for beverages, it must be dispensed from self service machines or presented in cups pre-filled by the management. Pre-filling shall be done only with the use of an approved ice scoop.
(f) If ready-to-eat, whole raw, uncut, fruits are included within continental breakfast menus, then adequate protective display equipment such as sneeze guard shielding or other protective display equipment must be provided to protect these food items from contamination from the tourist. In addition, self-service utensils, such as tongs and/or single-service articles, such as sanitary deli paper, must be provided to protect ready-to-eat, whole raw, uncut, fruits from potential contamination from consumer self-service.
(g) In all newly constructed, remodeled, or renovated establishments serving continental breakfasts, an employee handsink equipped with hot and cold water under pressure and maintained with a supply of dispensed soap and paper towels must be provided for hand washing. The handsink shall be located inside the physical facility where the continental breakfast food handling and warewashing operations are conducted. The water at this hand washing sink must be tempered by a mixing faucet.
(h) In all newly constructed, remodeled or renovated establishments serving continental

breakfasts, the physical facilities for food storage, food transfer and equipment warewashing shall comply with the following criteria:
1. Physical facilities must be physically and functionally separate from those associated with laundry, janitorial, living and or sleeping activities and associated storage facilities;
2. Floors, floor coverings, walls, wall coverings, and ceilings, with the exception of a ceiling in a non perishable food storage and seating area, shall be designed, constructed, and installed so they are smooth and easily cleanable;
3. Studs, joists, and rafters may not be exposed within physical facilities, except as listed in (h) 2.and
4. Physical facilities shall be so designed and constructed so as to exclude the presence of vermin.
5. All equipment, food, and supplies must be kept at least six inches off of the floor.
(i) Any preparation beyond the limitations of a continental breakfast requires a food service permit.
(3) **Bed and Breakfast Inn.** A bed and breakfast inn may serve a full meal prepared as referenced in DPH Rule 511-6-2-.03 (b) within this Chapter in a residential kitchen located within the inn, if the following requirements are met.
(a) Limited Food Service: Food may only be prepared for guests staying in rooms located in the bed and breakfast inn. No catering off the premises will be allowed.
(b) Food Supplies:
1. Food shall be in sound condition, safe for human consumption, and obtained from sources that comply with the applicable laws relating to food safety. The use of food in hermetically sealed containers that was not prepared in a food processing establishment is prohibited. However, jams, jellies, and preserves made at the bed and breakfast inn from naturally high-acid fruits may be served to guests.
2. Fluid milk and fluid milk products used shall be pasteurized and shall comply with applicable law. Dry milk and milk products used shall be made from pasteurized milk and milk products and shall be used only in cooking. Raw milk shall not be provided or used.
3. Only clean shell eggs meeting U.S. Department of Agriculture grade standards or pasteurized liquid, frozen or dry eggs or pasteurized dry egg products shall be used.
4. Only ice which has been manufactured with potable water and handled in a sanitary manner shall be used.
(c) Food Protection:
1. All food shall be prepared, stored, displayed, dispensed, placed, transported, sold, and served so as to be protected from dirt, vermin, unnecessary handling, droplet contamination, overhead leakage, or other contamination.
2. The temperature of potentially hazardous foods shall be 41^0F (5^0C) or below or 135ºF (60℃) or above at all times, except during necessary times of preparation.
(i) Potentially hazardous foods shall be stored in a refrigerator or freezer that can maintain required product temperatures.
(ii) A thermometer accurate to ±2℉ shall be provided for each refrigeration unit and shall be located to indicate the air temperature in the warmest part of the unit and shall be affixed to be readily visible.
(iii) Containers of potentially hazardous food displayed for service may be placed in an ice bed or
held by a similar means which maintains the food at or below 41℉. An accurate easily readable metal probe thermometer suitable for measuring the temperature of food shall be readily available on the premises.
3. Hermetically sealed packages shall be handled so as to maintain product and container integrity.

4. Containers of food shall be stored a minimum of six inches above the floor in a manner that protects the food from splash and other contamination and that permits easy cleaning of the storage area.
5. Pets may be present on the premises, but shall be kept out of food preparation and dining areas at all times. This exclusion shall not apply to fish in aquariums. Service animals accompanying handicapped persons and trainers of such animals shall be permitted in dining areas.
6. Laundry facilities may be present in the residential kitchen, but shall not be used during food preparation and service. Laundry facilities will consist of at least a residential clothes washer and dryer and adequate storage facilities for clean laundry and separation of soiled laundry and supplies.
7. Tourists shall not be allowed to use cooking facilities in the residential kitchen.
8. No insecticide, rodenticide, or other poisonous substance shall be stored in any food preparation area, except in a separate enclosure provided for that purpose. All poisonous substances, detergents, bleaches, cleaning compounds, or any other injurious or poisonous material shall be specifically and plainly labeled as to contents and hazardous use and shall be stored only in their original, labeled container. Such products shall not be used or stored in a manner which may cause contamination or adulteration of food, food contact surfaces, or utensils.
(d) Food Preparation:
1. Food shall be prepared with a minimum of manual contact. Food shall be prepared on foodcontact surfaces and with utensils that are clean and have been sanitized. Food handlers shall not handle or touch ready-to-eat foods with their bare hands.
2. Raw fruits and raw vegetables that will be cooked, cut, or combined with other ingredients, or that will be otherwise processed into food products by the food establishment, shall be cleaned with potable water in sinks or containers that have been washed and sanitized before being used.
3. Potentially hazardous food (time/temperature control for safety food) processed by cooking shall be cooked to heat all parts of the food to a minimum time/temperature as follows: (i) shell eggs (for immediate service), beef steak, and unground meat and fish shall be cooked to an internal temperature of 145^0F (63^0C) or above for 15 seconds; (ii) ground meat and pork, fish, game animals raised for food, and eggs for hot holding shall be cooked to an internal temperature of at least 155^0F (68^0C) for 15 seconds; (iii) roast beef shall be cooked to an internal temperature of at least 130^0F (54^0C) for 112 minutes; (iv) poultry or any stuffed meat, poultry, or fish shall be cooked to an internal temperature of 165^0F (74^0C) for 15 seconds. See the Department's rules and regulations governing food service establishments Chapter 511-5-14 or future subsequent Chapters adopted thereafter for reference to time/temperature cooking requirements.
4. Potentially hazardous foods (time/temperature control for safety foods) shall be cooked and immediately served to tourists. The following potentially hazardous food handling practices are prohibited:
(i) Cooling and reheating prior to service.
(ii) Hot holding for more than two hours.
(iii) Undercooked or raw potentially hazardous food (time/temperature control for safety food) of animal origin served to tourists.
(iv) Service of leftovers.
5. All frozen food shall be kept frozen until preparation. No food which has been thawed shall be refrozen unless it has been cooked or processed. Potentially hazardous foods shall be thawed:
(i) In refrigerated units at a temperature not to exceed 41°F (5°C); or

(ii) Under potable running water at a temperature of 70°F (21°C) or below, with sufficient water velocity to agitate and float off loose food particles into the overflow and for a period of time not to exceed that reasonably required to thaw the food; or
(iii) In a microwave oven only when the food will be immediately transferred to conventional cooking units as part of a continuous cooking process or when the entire, uninterrupted cooking process takes place in the microwave oven; or
(iv) As part of the conventional cooking process.
(e) Food Display and Service:
1. Employees serving food shall use tongs, other utensils, or wear plastic gloves.
2. When food is displayed for customer self service, it is not necessary to have protective sneeze shields as long as the following guidelines are met.

(i) Potentially hazardous foods are kept at or below 41· F (5· C) or at or above 135· F (57· C).

(ii) Food is displayed no more than two hours.
(iii) No open food or potentially hazardous foods is reserved or reused.
(iv) Tongs or other suitable utensils are provided so that there is no hand contact with the food.
(f) Health and Practices:
1. No person, while infected with a disease in a communicable form that can be transmitted by foods, or who is a carrier of organisms that cause such a disease, as stated within the Department's rules and regulations governing food service establishments Chapter 511-5-14 or future subsequent Chapters adopted thereafter, or while affected with a boil, infected wound, or acute respiratory infection, shall work in any capacity in which there is a likelihood of such person contaminating food or food contact surfaces with pathogenic organisms or transmitting disease to other persons.
2. Persons engaged in food preparation, service, and warewashing operations shall wear clean clothing and properly wash their hands and the exposed portions of their arms with soap or detergent and warm water before starting work, after smoking, eating, or using the toilet, and as often as is necessary during work to keep them clean. Employees shall keep their fingernails trimmed and clean. All bed and breakfast inns permitted or extensively remodeled after the effective date of this rule shall provide facilities exclusively for handwashing within or adjacent to each kitchen. In bed and breakfast inns existing prior to the effective date of these "Rules", the utensil warewashing sink may be used for handwashing. Soap and paper towels in dispensers must be provided.
3. Persons engaged in food preparation shall wear a hair net, cap, or other suitable covering which restrains all loose hairs and shall maintain a high degree of personal cleanliness and conform to good hygienic practices during all working periods.
4. Employees shall consume food or use tobacco only in designated areas. Such designated areas shall not be located in food preparation areas or in areas where the eating or tobacco use of an employee may result in contamination of food, equipment, or utensils.
(g) Equipment and Utensils:
1. Equipment and utensils shall be constructed and repaired with safe materials, including finishing materials; shall be corrosion resistant and nonabsorbent; and shall be smooth, easily cleanable and durable under conditions of normal use. Single service articles shall be made from clean, sanitary, and safe materials. Equipment, utensils and single service articles shall not impart odors, color and taste nor contribute to the contamination of food.

2. Safe plastic or safe rubber or safe rubber-like materials that are resistant under normal conditions of use to scratching, scoring, decomposition, grazing, chipping, and distortion, that are of sufficient weight and thickness to permit cleaning and sanitizing by normal warewashing methods are permitted for repeated use.
3. Single service articles shall not be re-used.
4. All equipment and utensils shall be maintained in good repair.
(h) Cleaning and Sanitization of Equipment and Utensils:
1. Food utensils and equipment shall be stored in a manner to avoid contamination.
2. Food contact surfaces and sinks shall be smooth and easily cleanable.
3. Food contact equipment, surfaces, tableware, and utensils shall be cleaned and sanitized prior to food preparation for the public and after each use.
4. Sinks, basins, or other receptacles used for cleaning of equipment and utensils shall be cleaned before use.
5. Equipment and utensils shall be pre-flushed or pre-scraped and, when necessary, presoaked to remove food particles and soil.
6. Manual cleaning and sanitizing of cooking equipment, utensils, and tableware shall be conducted as follows:
(i) A 3-compartmented, warewashing sink shall be provided and used. The Health Authority may allow the use of compartments other than sinks.
(ii) All five steps of the warewashing process shall be completed: pre-rinsing or scraping; application of cleaners for soil removal; rinsing to remove cleaning chemicals; sanitizing and air drying.
(iii) Sanitizing may be accomplished by immersion or sanitizing in place with the use of a 50 ppm chlorine solution or 12.5 ppm iodine solution or other chemical sanitizer which meets the requirements of 40 Code of Federal Regulation 180.940 Tolerance exemptions for active and inert ingredients for use in antimicrobial formulations (food-contact surface sanitizing solutions).
(iv) Wash, rinse and sanitizing solutions shall be maintained in a clean condition.
(v) Water for washing and rinsing shall be maintained at 110^0F (43^0C) or above. Water for sanitizing shall be maintained at 75^0F (24^0C) or above. If using iodine for chemical sanitization, water shall be at a pH not higher than 5.0.
(vi) A test kit or device that measures the parts per million concentration of the sanitizing solution shall be used each time the sanitizing solution is changed.
7. Mechanical cleaning and sanitizing shall be conducted as follows:
(i) A commercial warewasher must be certified by NSF standards or equivalent, in good repair and operating to manufacturer's specifications.
(ii) If using a non-commercial warewasher, it must remove all physical soil from all surfaces of dishes and must be equipped with a high temperature rinse cycle such as a sani-cycle and all cycles on the machine must be used (prewash, wash, sanitizing rinse) and be certified by NSF standards or,
(iii) If no high temperature rinse cycle is provided, the hot water supplied to the machine must be at a minimum of 155^0F (68^0C). The operator shall use daily, a maximum registering thermometer or a heat thermal label to determine that the sanitizing rinse water temperature is a minimum of 155^0F (68^0C).
(iv) The dishwasher warewasher must be installed and operated according to manufacturer's instructions for the highest level of sanitization possible when sanitizing residential kitchen facilities' utensils and tableware. A copy of the instructions must be available on the premises at all times.
8. There shall be sufficient area or facilities such as portable dish tubs and drain boards for the proper handling of soiled utensils prior to washing and of cleaned utensils after sanitization. Use shall not to interfere with safe food handling, handwashing, and the

proper use of dishwashing facilities. Equipment, utensils, and tableware shall be air dried only.
[Authority: O.C.G.A. §§ 31-2A-6 and 31-28-5]

15-.20 Compliance Procedures.
(1) **Summary Suspension of Permits.** The Health Authority shall have the power and authority to summarily suspend a permit if the owner or operator refuses to allow the Health Authority to enter upon and inspect the premises of the tourist accommodation at any reasonable time and in a reasonable manner, or if any part of the tourist accommodation presents an imminent health hazard to members of the public, including but not limited to (i) an unapproved or improperly functioning wastewater disposal system, (ii) an infestation of insects, rodents, or other vermin, or (iii) an unapproved water supply or inadequate water system.
(a) A summary suspension shall be made in writing and shall be effective immediately upon receipt by the owner or operator, and operation of the tourist accommodation must cease immediately. If neither the owner nor operator can be found, notification is achieved by tacking the notice to the front door of the tourist accommodation and mailing a copy to the owner or operator. The notice of suspension shall state the violations that justify summary suspension, and the corrective action that must be taken in order for the summary suspension to be lifted.
(b) The owner or operator may seek review of the summary suspension by written request to the District Health Director. The matter shall be heard by the District Health Director, or a supervisory level employee designated by the District Health Director who was not personally involved in the inspection, acting as a review official. The Health Authority shall make every effort to arrange a hearing within 72 hours of the request.
(c) The hearing shall be conducted informally and without application of the rules of evidence. Both the Environmental Health personnel and the owner or operator shall be given an opportunity to present any arguments or evidence in support of their positions. The review official may uphold the summary suspension, or may modify or lift the suspension on such conditions as may be appropriate.
(d) The owner may request a hearing under this subsection without prejudice to its right to pursue an appeal to the Department pursuant to O.C.G.A. § 31-5-3.
(2) **Partial closure or restricted access**. The Health Authority shall be authorized to close or restrict access to any area of the premises found in violation of a critical item under Areas of Critical Public Health Risk on the Tourist Accommodation Inspection Record or that may be determined by the Health Authority to be an imminent health hazard to the public. Such area shall be closed until the violations have been corrected or imminent health hazards abated as determined by the Health Authority.
(a) Closure and restriction actions must be recorded on an inspection record, identifying the problem and the corrective actions to be taken by the permit holder or person in charge; and
(b) The date and time the violation was noted, and the expected date of correction to be completed must be recorded on the inspection record as well.
(c) Considering the nature and the complexity of the corrective action or plan for correction required, the Health Authority may specify that the permit holder obtain the services of an appropriate licensed professional to correct a violation or imminent health hazard. Then, the operator must submit a plan of correction developed by the professional for review by the Health Authority. Upon completion of the corrective action, a letter of verification signed by the appropriate professional must be submitted before scheduling a re-inspection as specified in subsection(2)(d) of this Rule. Failure to comply

with these actions may led to an enforcement action outlined in subsection (1)(a) of this Rule.
(d) At its discretion, the Health Authority shall have the authority to direct the permit holder or person in charge to relocate tourists to another location within the tourist accommodation. If such action is taken, the Health Authority will provide a detailed explanation of such action on the inspection report form, and a re-inspection of the vacated area by the Health Authority will be required before tourists are permitted to return to locations from which they had been previously removed.
(3) **Suspension or Revocation of Permits.** The Health Authority shall have the power and authority to suspend or revoke a permit if the owner or operator of a tourist accommodation is unwilling or unable to comply with these regulations, the regulations of the local Health Authority, or the provisions of O.C.G.A. Title 31-28-1 et seq.
(a) An owner or operator shall be presumed unwilling or unable to comply if he or she refuses to allow the Health Authority to enter upon and inspect the premises of the tourist accommodation at any reasonable time and in a reasonable manner, or if any critical violation is found to be uncorrected upon the third consecutive inspection, or upon continuous violation of other rules in the chapter.
(b) The revocation of a permit may be appealed to the Department of Public Health in accordance with O.C.G.A. Section 31-5-3 by sending written notice, by certified mail or statutory overnight delivery, addressed to the Department of Public Health, Office of General Counsel, with a copy to the Health Authority official that revoked the permit. Within ten days of receiving the notice, the Health Authority shall provide the Department with a copy of its entire file on the inspections and actions that led to the revocation of the permit. The Department shall schedule a hearing within 20 days of receiving the notice, and shall decide the matter upon the arguments of the parties and the administrative record.
(4) **Voluntary Closure.** In lieu of suspension or revocation of a permit, the Health Authority may in its discretion allow a tourist accommodation to voluntarily close all or part of the premises until such time as violations are corrected, and upon such additional restrictions as it may deem appropriate.
(5) **Resumption of Operations.** If operations of a tourist accommodation are discontinued due to
the order or action of the Health Authority, then the permit holder shall obtain approval from the Health Authority before resuming operations.
[Authority: O.C.G.A. §§ 31-2A-6, 31-5-3, and 31-28-5]

15-.21 Environmental Health Personnel.
(1) All Environmental Health personnel who are assigned responsibilities in tourist accommodation plan review, permitting, inspecting, or other means of enforcing this Chapter, will complete the minimum state sponsored one week training course and exam requirements and obtain at least two hours of in-service training annually.
(2) All in-service training must be approved by the local Environmental Health supervisor or lead personnel. Employee attendance records of approved training shall be maintained in the county of employment and shall be subject to electronic submission and Department monitoring.
[Authority: O.C.G.A. §§ 31-2A-6 and 31-28-5]

15-.22 Fees. The Department may adopt a fee schedule to support required training, monitoring, and evaluation activities.
[Authority: O.C.G.A. §§ 31-2A-6 and 31-28-5]

15-23 Effective Date. These regulations shall become effective on April 1, 2014.
[Authority: O.C.G.A. §§ 31-2A-6 and 31-28-5]

Section 2. That the preamble of this shall be considered to be and is hereby incorporated by reference as if fully set out herein.

Section 3 **(a)** It is hereby declared to be the intention of the Board of Commissioners that all Sections, paragraphs, sentences, clauses and phrases of this Article are and were, upon their enactment, believed by the Board of Commissioners to be fully valid, enforceable and constitutional.

(b) It is hereby declared to be the intention of the Board of Commissioners that, to the greatest extent allowed by law, each and every section, paragraph, sentence, clause or phrase of this ordinance is severable from every other section, paragraph, sentence, clause or phrase of this ordinance. It is hereby further declared to be the intention of the Board of Commissioners that, to the greatest extent allowed by law, not Section, paragraph, sentence, clause or phrase of this Article is mutually dependent upon any other section, paragraph, sentence, clause or phrase of this Article.

(c) In the event that any phrases, clause, sentence, paragraph, or section of this article shall. For any reason whatsoever, be declared invalid, unconstitutional or otherwise unenforceable by valid judgment or decree of any court of competent jurisdiction, it is the express intent of the Board of Commissioners that such invalidity, unconstitutionality or unenforceability shall, to the greatest extent allowed by law, not render invalid, unconstitutional or otherwise unenforceable any of the remaining phrases, paragraphs, sentences, clauses and sections of this Article shall remain valid, constitutional, enforceable and full force and effect.

Section 4 All Ordinances or resolutions and parts of ordinances or resolutions in conflict herewith are hereby expressly repealed except those provided for herein.

Section 5 The effective date of this Ordinance shall be April 1, 2014.

So ordained this 27th day of March, 2014 by the

BOARD OF COMMISSIONERS
FAYETTE COUNTY, GEORGIA

_____
Steve Brown, Chairman

SEAL

ATTEST:

_____
FLOYD JONES, COUNTY CLERK

Approved as to form

_____
INTERIM COUNTY ATTORNEY

Georgia Department of Public Health

Rules and Regulations
Tourist Accommodations
Chapter 511-6-2

Effective Date: January 1, 2014

We Protect Lives.

RULES
OF
DEPARTMENT OF PUBLIC HEALTH
CHAPTER 511-6-2
TOURIST ACCOMMODATIONS

TABLE OF CONTENTS

511-6-2-.01	Legal Authority	511-6-2-.12	Garbage and Refuse Disposal
511-6-2-.02	Title and Purpose	511-6-2-.13	Insect and Rodent Control
511-62-.03	Definitions	511-6-2-.14	Construction, Layout and Furnishings
511-62-.04	Tourist Accommodation Permits	511-6-2-.15	Heating and Fire Safety
511-6-2-.05	Inspections	511-6-2-.16	Swimming Pools
511-6-2-.06	Employee Health and Safety	511-6-2-.17	Laundry Facilities
511-6-2-.07	Water Supply and Sanitizing	511-6-2-.18	Grounds
511-6-2-.08	Toilet Facilities	511-6-2-.19	Food Service Options
511-6-2-.09	Sewers	511-6-2-..20	Compliance Procedures
511-6-2-.10	Sewage Disposal	511-6-2-.21	Environmental Health Personnel
511-6-2-.11	Plumbing	511-6-2-.22	Fees
		511-6-2-.23	Effective Date

511-6-2-.01 Legal Authority. These rules are adopted pursuant to the Official Code of Georgia Annotated §§ 31-2A-6 and 31-28-1 *et seq*.

[Authority: O.C.G.A. §§ 31-2A-6 and 31-28-5]

511-6-2-.02 Title and Purpose. These rules shall be known as the Rules and Regulations for Tourist Accommodations. The purpose of these rules is to emphasize the minimum standards necessary for tourist accommodations to provide essential services, facilities, and sanitary conditions in order to protect the public health and safety.

[Authority: O.C.G.A. §§ 31-2A-6 and 31-28-5]

511-6-2-.03 Definitions. The following definitions shall apply in the interpretation and enforcement of these rules:

(a) **"Approved"** means acceptable to the Health Authority based on a determination of conformity with principles, practices, and generally recognized standards that protect public health.

(b) **"Bed and Breakfast Inn"** means an establishment of twenty guestrooms or less, which serves food only to its registered tourists , and serves only a breakfast or similar early morning meal and an appropriate light snack in which the price of the food is included in the price of the overnight accommodation. For purposes of the rules, "Bed and Breakfast Inn" refers to an establishment in which the predominant relationship between the occupants thereof and the owner or operator of the establishment is that of innkeeper and tourist."

(c) **"Consumer"** means in terms of relationship with a tourist accommodation, a transient person who becomes a guest of a tourist accommodation and is a member of the public, takes possession of food, receives lodging and services for a fee, is not functioning in the capacity of an operator of a tourist accommodation establishment and does not offer the food for resale.

(d) **"Continental breakfast"** is defined as and may include (1) any non-potentially hazardous food (non-time/temperature control for safety food) which has been prepared commercially by a food processing plant that meets requirements of law and is served to the consumer out of the original container in which it was purchased or if approved by the Health Authority, it may be served out of a commercial, self-service dispenser if such dispensers are properly designed to protect contained food from the consumer; (2) non-potentially hazardous beverages such as coffee and hot tea served in the container in which it was prepared; (3) potentially hazardous foods (time/temperature control for safety foods) such as milk, cream, butter and cheese prepared by a food processing plant that meets requirements of law only if served in single serving commercially packaged original containers; (4) juices and condiments including jams, jellies, sugar, salt and pepper served in single serving commercially packaged original containers or juices may be served from a bulk mechanical dispenser, if appropriate warewashing is available;

(5) non-ready-to-eat whole, uncut, raw fruits, such as bananas, grape fruit, or oranges that require peeling of rind by the consumer before consumption; and (6) ready-to-eat, whole, raw, uncut fruits such as apples and/or grapes where the peel is consumed along with the meat of the fruit. Any additional items, other than those listed, will require a food service permit in accordance with the Department's rules and regulations governing food service establishments Chapter 511-5-14 or any future subsequent Chapters adopted thereafter.

(e) **"County Board of Health"** means the County Board of Health established pursuant to O.C.G.A. Section 31-3-1.

(f) **"Critical item"** means a provision of this Chapter as delineated on the inspection report that, if violated, is more likely than other violations to contribute to food contamination, insanitary conditions, illness or environmental health hazard and may create an imminent health hazard.

(g) **"Department" or "DPH"** means the Department of Public Health (DPH).

(h) **"Dependent trailer"** means a trailer or recreational vehicle (RV) which is dependent upon a service building housing shower/ toilet facilities.

(i) **"Detached cabin"** means, for the purpose of installing and operating a portable spa on the premises, a separate dwelling having no wall in common with another dwelling or building. The cabin as part of a tourist accommodation shall be rented as an entire unit, not by individual rooms.

(j) **"Employee"** means any person engaged in the operation of a tourist accommodation whether compensated or not.

(k) **"Food"** means a raw, cooked, or processed edible substance, ice, beverage, or ingredient used or intended in whole or in part for human consumption, or chewing gum.

(l) **"Food-contact surface"** means a surface of equipment or a utensil with which food normally comes into contact or a surface of equipment or a utensil from which food may drain, drip, or splash into a food or onto a surface normally in contact with food.

(m) **"Food processing plant"** means a commercial operation that manufactures, packages, labels, or stores food, and provides food for sale or distribution to other business entities such as food processing plants, retail food sales, or food service establishments.

(n) **"Food service"** means a facility that shall comply with provisions of O.C.G.A. Chapter 26-2 Art. 13 and the rules, regulations and standards adopted thereunder.

(o) **"Health Authority"** means the County Board of Health if functioning in the administration and enforcement of O.C.G.A. Chapter 31-28 and the rules, regulations and standards adopted thereunder by the Department and subject to supervision and direction by the Department; and if not so functioning, the Department.

(p) **"Housekeeper's cart"** means a cart which is used to transport cleaning materials, room supplies, clean and soiled linens and refuse.

(q) **"Hydromassage bathtub"** means a permanently installed bathtub fixture designed to be filled with each use and equipped with a recirculation piping system, a pump and associated controls. It is designed so it can accept, circulate and discharge water upon each use. It does not contain a disinfection or filtration system.

(r) **"Imminent health hazard"** means a product, practice, circumstance, event or condition that requires immediate correction or cessation of operation in order to prevent a significant threat of danger or death, injury or illness.

(s) **"Independent trailer"** means a trailer or recreational vehicle (RV) which has a holding tank for waste and/or can be connected directly to a sewer connection.

(t) **"Law"** means applicable local, state, and federal statutes, regulations, and ordinances.

(u) **"Lodging"** means a temporary sleeping accommodation, with or without independent kitchenettes, offered to tourists, travelers or guests travelling from one place to another, stopping overnight or otherwise in need of a temporary place to stay.

(v) **“Non-ready-to-eat fruit”** means whole uncut, raw fruit, such as oranges, grapefruit, and bananas in which the peel must be removed by the consumer before the meat of the fruit is consumed.

(w) **“Non-permanent structure”** means any structures such as buildings, tents, park trailers or cabins that can be removed from the premise of a tourist accommodation and they are not restrained from removal by foundation or utilities, without internal plumbing, dependent upon central shower/toilet buildings for tourist personal hygiene and sanitation purposes, and are maintained, offered, or used for dwelling or sleeping quarters.

(x) **"Operator"** means the person who has the duty and responsibility of overall management of the tourist accommodation which includes maintaining a sanitary facility, providing guest services and training employees, or his/her representative, or person in charge.

(y) **“Packaged”** means bottled, canned, cartoned, securely bagged or securely wrapped, as packaged in a food processing plant. It does not include a wrapper, carry-out box or other nondurable container used to containerize food with the purpose of facilitating food protection during service and receipt of the food by the consumer.

(z) **“Park trailer** “ means a recreation vehicle primarily designed as temporary living quarters for recreation, camping or seasonal use, built on a single chassis, mounted on wheels, with a gross trailer area not exceeding 400 square feet in the set-up mode, and certified by the manufacturer as complying with ANSI A119.5.

(aa) **“Permit”** means the DPH document issued by the Health Authority that authorizes a person to operate a Tourist Accommodation and signifies satisfactory compliance with this Chapter.

(bb) **"Person"** means any individual, partnership, corporation, or association.

(cc) **“Person in charge”** means the individual present in a tourist accommodation establishment who is the owner, supervisor, manager or owner’s designated representative of the tourist accommodation establishment present at the time of the inspection. The person shall be knowledgeable of the responsibilities in the chapter and have access to facilities on the premises.

(dd) **“Portable spa unit”** means a factory fabricated unit consisting of a water holding vessel with all water-circulating, filtration, heating and control equipment integral to the unit. Equipment can include pumps, air blowers, heaters, lights, controls and disinfection and filtration systems. These portable spas are intended for residential use.

(ee) **“Potentially hazardous food (time/temperature control for safety food)”** means a food that requires time/temperature control for safety to limit pathogenic microorganism growth or toxin formation. Refer to Rule.01 within the Department’s rules and regulations governing food service establishments Chapter 511-5-14 or future subsequent Chapters adopted thereafter.

(ff) **"Premises"** means and includes all physical buildings, appurtenances, parking lots, drive ways and all property used by the tourist accommodation.

(gg) **“Primitive campsite”** means a site in an undeveloped section of private or public land with no developed facilities or amenities such as water, electricity or toilets/shower facilities, where campers are expected to leave little or no evidence of human visitation.

(hh) **"Preparation of food"** means to put together or make by combining ingredients and processing food for consumption by the consumer.

(ii) “**Ready-to-eat food”** means food that is in a form that is edible without additional preparation to achieve food safety. It includes the following:

1. All potentially hazardous food (time/temperature control for safety food) that is cooked to the temperature and time required for the specific food;
2. Raw fruits and vegetables that are washed;
3. Fruits and vegetables that are cooked for hot holding;
4. Plant food for which further washing, cooking, or other processing is not required for food safety, and from which rinds, peels, husks, or shells, if naturally present have been removed;
5. Substances derived from plants such as spices, seasonings, and sugar;
6. A bakery item such as bread, cakes, pies, fillings, or icing for which further cooking is not required for food safety;

7. The following products that are produced in accordance with USDA guidelines and that have received a lethality treatment for pathogens: dry, fermented sausages, such as dry salami or pepperoni; salt-cured meat and poultry products, such as prosciutto ham, country cured ham, and Parma ham; and dried meat and poultry products, such as jerky or beef sticks; and

8. Foods manufactured as specified in 21 CFR Part 113, Thermally Processed Low-Acid Foods Packaged in Hermetically Sealed Containers.

(jj) **“Ready–to-eat fruit”** means whole raw, uncut, fruits, such as apples and/or grapes, that have been washed prior to service and the meat and the peel is normally consumed by guest.

(kk) **“Recreational vehicle (RV)”** means a vehicle designated for temporary living quarters for camping, travelling, or recreational use. It may have its own motor, or be mounted on or pulled by another vehicle.

(ll) “**Recreational vehicle park or campground**” means an accommodation for recreational vehicles or other camping outfits where an individual site is rented, and the intent of the park or campground is not to establish permanent residences.

(mm) **"Residential kitchen"** means a kitchen within a bed and breakfast inn used for the owners’ private use as well as preparation of a breakfast meal for tourists.

(nn) **"Restricted use pesticide"** means a pesticide product that contains the active ingredients specified in 40 CFR 152.175 (Pesticides classified for restricted use), and that is limited to use by or under the direct supervision of a certified applicator.

(oo) **"Sanitization"** means the application of cumulative heat or chemicals on cleaned food contact surfaces that, when evaluated for efficacy, is sufficient to yield a reduction of 5 logs, which is equal to a 99.999% reduction, of representative disease microorganisms of public health importance.

(pp) **"Sealed”** means free of cracks or other openings that allow the entry or passage of moisture.

(qq) **"Sewage"** means liquid waste containing animal or vegetable matter in suspension or solution and may include liquids containing chemicals in solution.

(rr) **“Single-service articles”** means tableware, carry-out utensils, cups, containers, lids or closures, plates, napkins, doilies, bags, containers, toothpicks, knives, forks, spoons, stirrers, paddles, straws, wrapping materials, and similar utensils that are intended to be discarded after one use.

(ss) **“Single-serving”** is food intended to be eaten by one person in one sitting and commercially packaged in a container intended to be discarded after one use.

(tt) **"Smooth"** means a surface that has no roughness or projections that render it difficult to clean or maintain in a sanitary condition.

(uu) **"Tourist Accommodation"** means any facility consisting of two or more rooms or dwelling units providing lodging and other accommodations to the general public, such as tourist courts, tourist cottages, tourist homes, trailer parks, trailer courts, motels, motor hotels, hotels, and any similar place by whatever name called and any food, beverage, laundry, recreational or other facilities or establishments operated in conjunction therewith. This definition includes any facility consisting of two or more rooms or dwelling units either joined together or separate on a common piece of property, furnished for pay and further includes campgrounds, recreational vehicle parks and bed and breakfast inns. A tourist accommodation is not a facility intended for permanent residence, or a facility available only to members of a club or through private lease or invitation.

(vv) **"Tourist”, "Traveler," or “Guest”** is defined as anyone who visits a Tourist Accommodation for the purpose of lodging, meals, or entertainment .

(ww) **"Trailer"** means any trailer coach, recreational vehicle (RV), park trailer or other similar unit designed for temporary dwelling or sleeping purposes.

(xx) **"Trailer space”** means a plot of ground within a trailer and/or recreational vehicle park designated for the accommodation of one trailer or recreational vehicle (RV).

(yy) **"Utensil"** means a food-contact implement or container used in the storage, preparation, transportation, dispensing, sale, or service of food, such as kitchenware or tableware that is multiuse, single-service, or single-use; gloves used in contact with food; temperature sensing

probes of food temperature measuring devices; and probe-type price or identification tags used in contact with food.

(zz) **"Warewashing"** means the cleaning and sanitizing of utensils and food-contact surfaces ~~of~~ or equipment.

[Authority: O.C.G.A. §§ 31-2A-6 and 31-28-5]

511-6-2-.04 Tourist Accommodation Permits.

(1) **Permit:**

(a) Any person operating a tourist accommodation shall obtain and display a valid DPH tourist accommodation permit issued by the Health Authority.

(b) To qualify for a permit, an applicant shall:

1. Be an owner of the tourist accommodation;

2. Allow access to the tourist accommodation;

3. Provide all information as required on the application and pay all applicable local and state fees referenced in DPH Rule 511-6-2-.22 at the time the application is submitted and;

4. Score 100% on the permitting inspection for newly constructed facilities.

(c) Prior to the issuance of a tourist accommodation permit to new or existing establishments, the applicant shall provide evidence of satisfactory compliance with the provisions of this Chapter and all other provisions of laws that apply to the location, construction and maintenance of tourist accommodation establishments and the safety of persons therein. At the request of the Health Authority, a permit holder of a tourist accommodation may be requested to show evidence of continued compliance with provisions of law that apply to the location, construction and maintenance of tourist accommodations and the safety of persons therein.

(d) Application for a permit to operate such tourist accommodation shall be made in duplicate upon forms provided by the Department. Such forms shall be completed in all details and signed

by the applicant or authorized agent and submitted at least ten days before the scheduled opening. The original shall be filed with the Health Authority.

(e) Upon receipt of an application for permit the Health Authority shall review the application and shall take action to approve or deny the permit as is provided in accordance with the provisions of O.C.G.A. Chapter 31-28 and these regulations.

(f) The Health Authority shall grant the permit or write a statement detailing the reasons for denial. The permit or statement shall be forwarded to the tourist accommodation operator.

(g) Permits shall expire upon change of ownership, location, or change in type of operation. A "change of ownership" means the transfer of a 50% interest or greater in the Tourist Accommodation to a person or entity not holding a current interest. In addition, once a Tourist Accommodation permit has been issued by the Health Authority, any significant or material change of the Tourist Accommodation's physical layout that would alter the interior or exterior structural blueprint of the facility may invalidate the permit. Unless prior approval has been obtained from the Health Authority, the facility shall maintain the physical layout shown within the approved plans and specifications of the Tourist Accommodation at the time of permit issuance. Operators shall notify the Health Authority before any structural, material or equipment changes to obtain approval if necessary.

(h) The permit shall be void when the tourist accommodation ceases to operate or moves to another location. The operator shall be responsible for notifying the Health Authority when the Tourist Accommodation ceases to operate and for removing the invalid permit from the facility.

(2) **Plans and Specifications.** Plans and specifications for remodeling tourist accommodations and construction of new tourist accommodations must be submitted for review and approval fourteen days prior to beginning construction. The plans shall indicate the proposed layout and arrangement of rooms in the establishment and what each is to be used for. Mechanical and plumbing details must be shown as well as construction materials to be used on floors, walls and ceilings. Additional plans for a kitchen will be required if food is to be prepared and served to

guests. The plans shall indicate the proposed menu or list of foods to be served, floor plan layout, arrangement of equipment, HVAC and plumbing, construction materials and finish schedule, the type and model of proposed fixed equipment and facilities and the anticipated service volume per day. If swimming pools or spas are planned, properly prepared plans and specifications must be submitted to the local Health Authority for review, approval, and issuance of a construction permit as per applicable rules and regulations governing public swimming pools. If no construction changes are to be made to an existing building, requirement for plans will be at the discretion of the Health Authority.

(3) **Private Camps.** Camps or facilities owned and operated for members only may be inspected at the Health Authority's discretion or upon request by the owner or operator or by complaint.

(4) **Primitive Campsites**. These campsites shall be inspected only at the discretion of the Health Authority.

[Authority: O.C.G.A. §§ 31-2A-6 and 31-28-5]

511-6-2-.05 Inspections.

(1) Tourist accommodations shall be subject to inspection at reasonable hours no less than twice annually and as often as is deemed necessary by the Health Authority to ensure adequate compliance with the provisions of these rules. The permit holder is responsible for providing a person or persons at the time of inspection who are authorized and able to provide access to all rooms, facilities and records of the tourist accommodation, and who can demonstrate that there is sufficient daily oversight of employees and routine monitoring of operations to ensure the following:

(a) Employees adhere to standard procedures or rules in the chapter when performing essential services such as linen exchange, sanitizing facilities or multiuse utensils, washing laundry, housekeeping and providing food in compliance for tourists, travelers and guest lodging or visiting the facility for other purposes;

(b) Employees are preventing cross-contamination of clean linen, towels or glassware in transport or storage by separating items, using designated containers and properly storing items after cleaning and sanitizing;

(c) Employees are preventing cross-contamination of ready-to-eat food with bare hands by properly using suitable utensils such as deli tissue, spatulas, tongs, single-use gloves, or dispensing equipment;

(d) Employees are properly cleaning and sanitizing multiuse utensils by monitoring temperature and exposure time for hot water sanitizing or chemical concentration, pH and temperature for chemical sanitizing;

(e) Employees of a bed and breakfast inn are properly cooking potentially hazardous food (time/temperature control for safety food), being particularly careful in cooking those foods known to cause severe foodborne illness and death, such as eggs and comminuted meats and conduct routine monitoring of the cooking temperatures using appropriate temperature measuring devices properly scaled and calibrated;

(f) Employees are using proper methods to hold potentially hazardous foods (time/temperature control for safety food) hot or cold for consumption;

(g) Employees are informed of their responsibility to report to the person in charge, information about their health and activities as they relate to diseases that are transmissible through food; and contact with multiuse utensils and;

(h) If an imminent health hazard exists, misuse of poisonous or toxic materials, onset of an apparent illness or outbreak, gross insanitary condition, or other circumstances that may endanger public health, then operations in the affected area shall be immediately discontinued by the person in charge and the Health Authority notified.

(2) The operator may accompany the Health Authority representative on tours of inspection, shall be given the opportunity to sign the completed inspection report and retain a copy for the tourist accommodation's file.

(3) The signature of the operator shall not mean his agreement with all of the findings recorded thereon, but only that he or she has received the report and the notification of alleged non-compliances with the rules.

(4) The results of the inspection shall be recorded on a form provided by the Department. This report will show violations found, corrective actions necessary for compliance with this rule, date of inspection, signature of person performing the inspection and the date when corrections to violations must be completed. If three or more critical item violations are found and recorded on a tourist accommodation inspection report form, then a re-inspection will be required within 60 days. Critical violations shall be corrected immediately, within 24 hours, or the Health Authority shall be authorized to close or restrict access to any area of the premises found in violation of critical item(s) on the official inspection record. Such areas shall be closed until the violations have been corrected or abated as determined by the Health Authority using the requirements in Rule .20.

(5) The operator shall correct other violations at time of inspection, if warranted, or within 30 days of the inspection report date. The Health Authority may extend the 30 days if an operator requires additional time to remove a violation based on a written plan of correction.

(6) The report shall be discussed and explained at the time of inspection with the tourist accommodation operator or if not present, the designated person in charge.

(7) The most recent tourist accommodation inspection report form shall be prominently displayed in public view at all times, between five feet and seven feet from the floor and in a public area such as the registration desk, where it can be read at a distance of one foot away.

(8) Any tourist accommodation inspection report addendum(s), completed by the Health Authority to document observations, violations, and corrective actions resulting from an inspection need not be displayed, but must be made available by the tourist accommodation operator to the public upon request.

(9) The Health Authority shall review all reports on reinsertion and shall institute such action as is deemed necessary to ensure compliance with the provisions of O.C.G.A. Chapter 31-28.

[Authority: O.C.G.A. §§ 31-2A-6 and 31-28-5]

511-6-2-.06 Employee Health and Safety.

(1) No person affected with any disease in a communicable form, boils, infected wounds, or sores, or while a carrier of a communicable disease shall work in any area of a tourist accommodation in any capacity in which there is a likelihood of such a person contaminating bedding and other surfaces with pathogenic organisms or transmitting disease to other individuals and no person known or suspected of being affected with any such disease or condition shall be employed in such an area or capacity. When there is reason to suspect that an employee has contracted any disease in communicable form or has become a carrier of such a disease, the employee shall be removed from the tourist accommodation premises; or his or her service is restricted to some area of the establishment where there would be no danger of transmitting disease.

(2) Employees, other than clerical employees, shall thoroughly wash their hands and the exposed portions of their arms with soap and warm water before starting work, during work as often as necessary to keep them clean and after smoking, eating, drinking or using the toilet. Employees shall keep their fingernails clean. Employees shall maintain a high degree of personal cleanliness and conform to other good hygienic practices.

[Authority: O.C.G.A. §§ 31-2A-6 and 31-28-5]

511-6-2-.07 Water Supply and Sanitizing.

(1) The water supply shall comply with all Federal, State and local laws and/or ordinances related to safe drinking water. The following shall apply as well:

(a) A public water system must be used by any tourist accommodation that regularly serves an average of twenty-five trailer spaces or guestrooms daily for at least sixty days out of the year. This applies to such places as hotels, motels, trailer parks or cottages.

(b) A nonpublic water system serving less than twenty-five trailer spaces or guestrooms, must be constructed, maintained, and operated according to applicable state and local codes and procedures, as amended.

(2) Cold running water under pressure shall be provided to all equipment that uses water. Hot and cold running water under pressure shall be provided to all lavatories, bathing facilities, laundry facilities, and water-using equipment where eating and drinking utensils are washed. In all new tourist accommodations, and where possible in existing tourist accommodations, hot water in all guest rooms shall not exceed 120^0F.

(3) The water supply shall be protected so as to preclude the possibility of back siphonage. Below grade stop and wastes cocks or hose bibs shall not be used.

(4) Hoses used for filling trailer water tanks shall be stored under sanitary conditions, used for no other purposes, and handled so that back siphonage cannot occur and contaminants will not be introduced into the trailer's water tank. A hose connected to a potable water service outlet that is intended for human consumption must not be long enough to reach any wastewater dump station.

(5) Water glasses, ice buckets and other multi-use utensils provided for tourist’s use in a guestroom or dwelling unit shall be washed, rinsed, and sanitized, in a 3-compartment, warewashing sink dedicated for that purpose only. They shall be thoroughly cleaned in the first compartment in a warm soapy solution; rinsed clean of soap and debris in warm clean water in the second compartment; and sanitized as specified in subsection (5) (d) 1, 2, 3, 4, and 5 using chemical sanitizers or sanitized by hot water as specified in subsection (5) (e), after each occupancy and as needed during occupancy. Where approved sanitizing methods are not provided, single service and single use articles, such as paper or plastic cups shall be made available in lieu of glasses and shall be discarded after one use. In lieu of sanitizing ice buckets, a sanitary, food grade, plastic bag, large enough to line the bucket and overlap the top edge may be provided for use by a single occupant.

(a) In addition to a dedicated 3-compartment warewashing sink, a commercial warewasher may be utilized if certified by ANSI/NSF as meeting standard 3 or equivalent for commercial warewashing equipment and it is maintained in good repair and operating according to its manufacturer's specifications.

(b) If a warewasher is provided in the room of the tourist accommodation, or if the operators provide a non-commercial warewasher (i.e. dishwasher) to clean and sanitize multi-use equipment and utensils between room occupancies, then the machine must comply with the following:

1. The warewasher must be able to remove all physical soil from all surfaces of dishes and;

2. Be equipped with a high temperature rinse cycle such as a sani-cycle and all cycles on the machine must be used (prewash, wash, sanitizing rinse) and be certified by NSF standards or;

3. If no high temperature rinse cycle is provided, the hot water supplied to the machine must be at a minimum of 155º F (68º C). The operator shall use a maximum registering thermometer or a heat thermal label to assure that the sanitizing rinse water temperature is a minimum of 155ºF (68ºC). The operator must record quarterly each warewasher temperature reading for review at the discretion of the Health Authority.

(c) The warewasher must be installed and operated according to manufacturer's instructions for the highest level of sanitization possible when sanitizing kitchen facilities' utensils and tableware. A copy of the instructions must be available on the premises at all times.

(d) A chemical sanitizer used in a sanitizing solution for a manual or mechanical operation at exposure times specified under this subsection shall meet the requirements specified in 40 CFR 180.940 Tolerance exemptions for active and inert ingredients for use in antimicrobial formulations (food-contact surface sanitizing solutions), shall be used in accordance with the Environmental Protection Agency (EPA)-approved manufacturer's label use instructions, and shall be used as follows:

1. A chlorine solution shall have a minimum temperature based on the concentration and pH of the solution as listed in the following chart;

Minimum Concentration	Minimum Temperature	
MG/L	PH 10 or less °C (°F)	PH 8 or less °C (°F)
25	49 (120)	49 (120)
50	38 (100)	24 (75)
100	13 (55)	13 (55)

2. An iodine solution shall have a minimum temperature of 75ºF (24ºC), minimum concentration between 12.5 ppm and 25 ppm, and pH of 5.0 or less or a pH no higher than the level for which the manufacturer specifies for the solution to be effective;

3. A quaternary ammonium compound solution shall have a minimum temperature of 75ºF (24ºC), have a concentration as specified in 40 CFR 180.940 Tolerance exemptions for active and inert ingredients for use in antimicrobial formulations and as indicated by the manufacturer’s use directions included in the labeling, and be used only in water with 500 ppm hardness or less or in water having a hardness no greater than specified by the manufacturer’s label;

4. If another solution of a chemical specified under 1 - 3 of this subsection is used, the permit holder shall demonstrate to the Health Authority that the solution achieves sanitization and the use of the solution shall be approved; or

5. If a chemical sanitizer other than chlorine, iodine, or a quaternary ammonium compound is used; it shall be applied in accordance with the manufacturer's use directions included in the labeling.

6. The operator shall provide a test kit or device that measures the sanitizing agent’s concentration in the solution. Each time a user replaces the solution; they shall measure the concentration of the sanitizer in parts per million.

(e) Hot water may be used to sanitize glasses, ice buckets and other multi-use utensils in a 3-compartmented, warewashing sink, after they have been thoroughly cleaned in the first compartment in a warm soapy solution; and then rinsed clean of soap and debris in clean warm water in the second compartment. These items will then be immersed for at least 30 seconds in water at a temperature of 171°F (77°C) or above and then air-dried before use and/or storage.

(6) Single- service items placed in a guestroom or dwelling units shall be commercially pre-wrapped to protect against contamination. Water glasses shall be inverted on a clean surface or covered with a single-service lid and other multi-use utensils shall be protected from contamination in a manner approved by the Health Authority. Equipment, utensils, dishes, etc. in kitchenettes provided for guest use shall be kept clean and sanitized between each tourist's occupancy. If kitchenettes are provided for tourist use, then dishwashing detergent shall be made available for tourist use.

(7) Drinking founts shall be constructed of impervious material and shall have an angle-jet nozzle above the overflow rim of the bowl. The nozzle shall be protected by a non-oxidizing guard and the bowl shall be constructed of an easily cleanable material.

(8) If self-service ice is provided, then it shall be from an approved water supply. In all new tourist accommodations, and in existing tourist accommodations when machines are replaced, only automatic dispensing ice machines will be allowed. In existing tourist accommodations permitted prior to the adoption of this rule, the use of existing self-service ice-storage bins may be continued, provided that the machines are maintained in good repair and capable of being properly cleaned and sanitized according to the manufacturer's recommendations. Further, a copy of the manufacturer's cleaning instructions shall be maintained onsite for review at the request of the Health Authority. Scoops, ice buckets, and other ice handling equipment, shall be of easily cleanable material and construction. They shall be stored in a clean place and shall be kept clean. Glassware shall not be used to scoop ice.

[Authority: O.C.G.A. §§ 31-2A-6 and 31-28-5]

511-6-2-.08 Toilet Facilities.

(1) Toilet, lavatory, and bathing facilities shall be provided at all tourist accommodations except as provided in paragraphs (13) and (16) of this Rule. Such facilities shall be easily accessible, convenient and available to patrons at all times.

(2) Bedrooms in permanent structures shall be provided with private or connecting baths. Central toilet facilities may be used to serve bed and breakfast inns and existing multi-storied tourist accommodations; so long as, toilet facilities are within the building, located on each floor, and deemed adequate by determination of the Health Authority to serve the tourists therein.

(3) Bedrooms in non-permanent structures such as cabins, park trailers, or structures in a wilderness settings used to provide lodging shall be provided with access to central toilet/shower building.

(4) Toilet rooms and fixtures must be smooth and nonabsorbent and shall be kept clean and in good repair. Walls, floors, and ceilings shall be constructed of easily cleanable nonabsorbent materials and shall be kept clean and in good repair. While being used by tourists, every surface of a bathtub, shower, shower enclosure, toilet and lavatory, which may come in contact with a person's body, must be sanitized each day, unless the guest has declined regular tourist room services. If a tourist declines regular tourist room services, the tourist accommodation facility must ensure that these surfaces are cleaned and sanitized at least once per week and between tourists.

(5) Toilet, lavatory and bathing facilities shall be mechanically ventilated. Where ventilation ducts are used, ducts from toilet rooms shall not be connected into return ventilation ducts to any other room. In existing tourist accommodations permitted prior to the adoption of this rule, the current ventilation must prevent odor, mold, mildew, and moisture. All new or major renovation of a tourist accommodation will require mechanical ventilation to be installed to the outside of the building separate from heating and air-condition systems.

(6) Toilet rooms, lavatories and bathing facilities shall be provided with soap, artificial light, and hot and cold water under pressure.

(7) Unused, individually wrapped soap or liquid soap dispensed from approved containers shall be provided in guest rooms. Soap furnished in public wash rooms or baths shall be dispensed from approved containers designed to preclude contamination of the contents by individual contact.

(8) Clean laundered individual towels shall be provided for each occupant in tourist rooms. Used or soiled towels shall be exchanged with clean towels and laundered between each occupancy and at the request of the customer. If fabric bath mats are provided, they shall be laundered or cleaned after each occupancy. Towels, whenever provided in public wash rooms or baths, shall be individual towels and if cloth shall have been laundered since last used.

(9) Toilet tissue shall be provided in a dispenser at each toilet at all times.

(10) Anti-slip tubs slip strips, appliqués, or slip-proof mats shall be provided in each bathing facility and shall be kept clean and in good repair.

(11) When used, hydromassage bathtubs shall be installed in accordance with the applicable codes. The recirculation piping system for a hydromassage bathtub shall be cleaned in accordance with the manufacturer instructions. Further, the manufacturer's cleaning instructions shall be available on-site for examination at the request of the Health Authority. Fresh potable water must be provided with each use.

(12) Where dependent trailers are located, central toilet/shower buildings shall be provided and sized to meet the expected guest load based upon the number of trailer spaces or fraction thereof.

(13) If the independent trailer sites are served by sewer connections, then it is not necessary for independent trailer sites to have access to central toilet/shower buildings. However, if such facilities are not provided, a sign with at least 2-inch high lettering shall be posted at the main entrance to the establishment notifying dependent trailer owners that central toilet/shower facilities are not available.

(14) Central Toilet/Shower Buildings shall meet at least the following minimum requirements:

(a) They shall be provided with separations for each sex with no interconnection. All rooms and parts of the central toilet/shower building shall be well-lighted, drained, ventilated to control odor, mold and mildew and of good construction with impervious materials. They shall be developed and planned in consultation with the Health Authority and designed so that good sanitation can be maintained throughout the building at all times. Every surface of a bathtub, shower, shower enclosure, toilet and lavatory which may come in contact with a person's body must be sanitized each day.

(b) Handicapped accessible toilet, shower, and lavatory facilities shall be designed and provided in accordance with state or local requirements and can be included as part of the required total number of water closets, shower heads, lavatories, etc.

(c) Central toilet/shower building shall be plainly identified with signage of at least 2-inch high lettering and located within 200 feet of dwelling units or trailer spaces served.

(d) When serving dependent trailers, central toilet/shower buildings shall be provided for each ten trailer spaces or fraction thereof with not less than one commode, one lavatory and one tub or shower head for each sex. In addition, at least one urinal shall be provided in each central toilet designated for men.

(e) When serving non-permanent structures, a central toilet/shower building shall be provided for each ten non-permanent structure, or fraction thereof, with not less than one commode, one lavatory and one tub or shower head for each sex. In addition, at least one urinal shall be provided in each central toilet designated for men.

(f) If partitions are provided between portions of the dressing room area, screen partitions, shower, toilet, and dressing room booths shall be of durable material not subject to damage by water and shall be designed so that a waterway is provided between partitions and floor to permit thorough cleaning of the walls and floor areas with hoses, mops and brooms.

(g) Hot and cold water under pressure shall be provided at all lavatories and showers.

(h) Floors of central toilet/shower buildings shall be free of joints or openings and shall be continuous throughout the areas. Floors shall have a slip-resistant, nonabsorbent surface that shall be relatively smooth to ensure thorough cleaning. In all newly constructed, remodeled or renovated facilities, floor drains shall be provided and floors shall be sloped not less than one-eight inch (1/8") per foot toward the drains to ensure positive drainage.

(i) In all newly constructed, remodeled or renovated facilities, an adequate number of three-fourths inch (3/4") hose bibbs shall be provided for flushing down the central toilet facility interior.

(j) Soap dispensers for providing either liquid or powdered soap shall be provided at each lavatory. Shampoo dispensers for shampoo shall be provided for each shower head. These dispensers shall be of all metal or plastic type with no glass. They shall dispense their contents in such a manner that precludes contamination of the contents by individual contact.

(k) At least one paper towel dispenser or hand blow dryer shall be provided for every three lavatories.

(l) An unbreakable mirror shall be provided over each lavatory.

(m) Toilet paper holders shall be provided at each water closet.

(n) Soap, paper towels, and toilet tissue shall be provided in all dispensers.

(o) Fixtures shall be installed in accordance with local plumbing codes and shall be properly protected against back-siphonage.

(p) Fixtures shall be designed so that they may be readily and frequently cleaned and disinfected. Frequent cleaning and disinfecting shall not cause damage.

(q) At least one trash receptacle will be available in toilet areas.

(15) In all newly constructed, remodeled or renovated facilities, at least one service sink or one curbed cleaning facility equipped with a floor drain shall be provided and shall be conveniently located for the cleaning of mops or similar wet floor cleaning tools and for the disposal of mop

water and similar liquid waste. Service sinks or curbed cleaning facilities may be located in central toilet/shower buildings servicing non-permanent structures or dependent trailer parks.

(16) Remote, primitive, or wilderness campsites may not be required to provide toilet facilities at the discretion of the Health Authority. If toilet facilities are not provided, then a sign shall be posted at the main entrance notifying campers of what facilities are or are not available.

[Authority: O.C.G.A. §§ 31-2A-6 and 31-28-5]

511-6-2-.09 Sewers.

(1) Sewers shall be designed in accordance with recognized engineering practices for the estimated sewage flow and shall be laid with watertight joints to a grade that will ensure a self-cleaning velocity. Sewers shall be constructed of durable materials properly vented and shall be installed at sufficient depth to withstand anticipated loads or other equally suitable means for protection of the pipe shall be used.

(2) Each independent trailer space shall be provided with a sewer connection not less than three inches in diameter. The design of these sewer connections shall be such that a watertight junction will be made with the trailer outlet. Each sewer connection shall be so constructed that it can be closed and when not in use shall be capped to prevent escape of odors.

(3) Facilities with independent trailer spaces may use a properly sized dump station for sewage disposal with a properly sized central toilet/shower building built in accordance with DPH Rule .08(5), (12), (14) and (15).

(4) Dump stations' connection to sewage disposal shall be as according to DPH Rule .10 of this Chapter.

(5) Minimum design and specifications for dump stations shall be as follows:

(a) Each dump station shall be equipped with a concrete pad surrounding the drain. The concrete pad shall meet all of the following requirements: (See Drawing #1)

1. It shall be a minimum of six feet by six feet in size;

2. It shall be a minimum of six inches in thickness;

3. It shall have a drain opening which is at least four inches in diameter with a foot-operated, self-closing cap which forms a tight seal with the drain. The drain opening shall be located outside of the wheel travel portion of the pad, and a minimum of 2 feet from any edge of the pad and curbing;

4. It shall have minimum four-inch tall curbing bordering the non-wheel travel area of the pad;

5. All surface drainage must be diverted around and away from pad;

6. The surface of the pad shall slope at least .25 inch per foot from the edge to the drain;

7. Four-inch piping shall run from the drain to either an on-site sewage management system or to a public sanitary sewer system;

8. All plumbing must be in compliance with applicable state and local plumbing codes;

9. A water supply outlet for wash down shall be provided with a water source that is protected from backflow and back-siphonage, and with a retractable spring coiled water delivery device or other system approved by the Health Authority. Hoses used for flushing the dump station pad shall not exceed the length necessary to reach the entire pad; and

10. Drain must include ability to receive wash down water from the pad.

(b) Each dump station shall be easily accessible to the entrance and exit area of the tourist accommodation and have safe, all weather access roadway that slopes away from the dump station pad.

(c) Each dump station shall be properly sealed to prevent nuisances.

(d) Each dump station shall be posted with signs that are clearly and indelibly labeled stating instructions for use with minimum one inch tall lettering. These signs must be at least 2 feet from pad. The signs shall include the statement in at least 1-inch high lettering, **“Georgia law prohibits dumping sewage from recreational vehicles, camper trailers, and other holding tanks onto the ground. The water supply at this location is to be used for flushing and cleaning purposes only, and not for human consumption.”**

(e) Each dump station shall be maintained in a clean and functional manner by the tourist accommodation operator.

(f) Existing facilities with dump stations not in compliance with the design criteria in this Rule shall bring their dump station into compliance with the requirements of subsection (5) of this Rule when the station is repaired or renovated, or upon change of ownership. This exception does not exclude any requirement to maintain the dump station to prevent a public health nuisance or hazard.

(6) Each dump station shall have an available water supply for the flushing of dump station areas and the following shall apply: (See Drawing #2)

(a) Each dump station shall be constructed and operated so as to protect the water supply and all other water outlets within the tourist accommodation from contamination due to backflow in accordance with DPH Rule 511-6-2-.11.

(b) Any hose or sprayer must be long enough to allow for a person to operate the drain opening while spraying the pad area.

(c) The washing water supply towers, connections, hoses and other parts must be colored red. Under no circumstances shall the tourist accommodation operator allow a hose that is long enough to reach a water outlet that is used for human consumption to be connected to a water service outlet at a dump station.

(d) Each dump station shall be located such that any water source or service outlet used for filling water tanks or other uses for human consumption is at least fifty feet away from the dump station facility.

Drawing #1

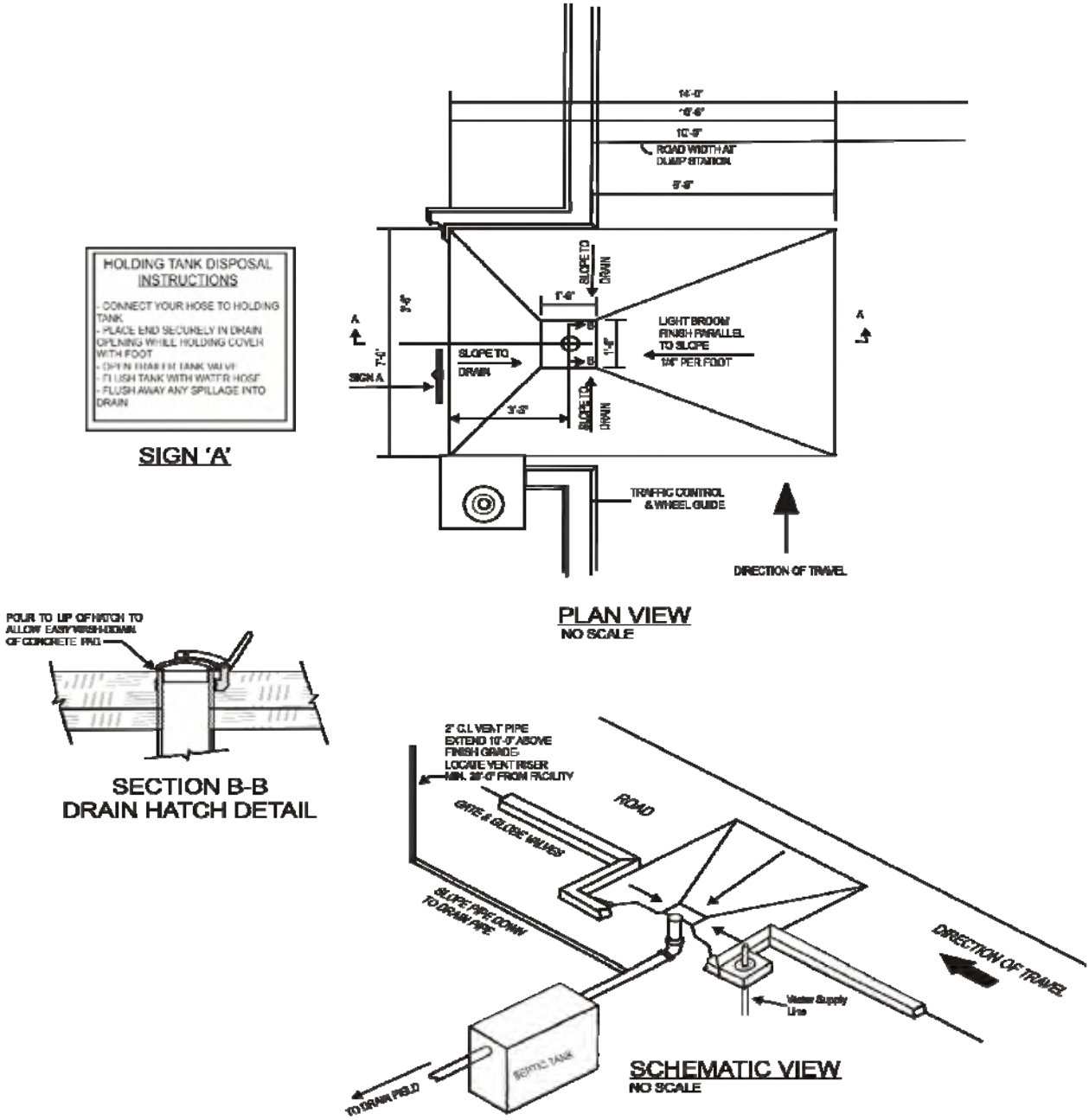
HOLDING TANK DISPOSAL INSTRUCTIONS
- CONNECT YOUR HOSE TO HOLDING TANK
- PLACE END SECURELY IN DRAIN OPENING WHILE HOLDING COVER WITH FOOT
- OPEN DRAIN OR TANK VALVE
- FLUSH TANK WITH WATER HOSE
- FLUSH AWAY ANY SPILLAGE INTO DRAIN
SIGN 'A'
14'-0"
10'-0"
ROAD WIDTH AT DUMP STATION
5'-0"
SLOPE TO DRAIN
1'-4"
LIGHT BROOM FINISH PARALLEL TO SLOPE
1/4" PER FOOT
SLOPE TO DRAIN
SIGN A
3'-3"
TRAFFIC CONTROL & WHEEL GUIDE
DIRECTION OF TRAVEL
PLAN VIEW
NO SCALE
POUR TO LIP OF HATCH TO ALLOW EASY WASH-DOWN OF CONCRETE PAD
SECTION B-B
DRAIN HATCH DETAIL
2" C.I. VENT PIPE EXTEND 10'-0" ABOVE FINISH GRADE
LOCATE VENT RISER MIN. 25'-0" FROM FACILITY
ROAD
GATE & GLOBE VALVES
SLOPE PIPE DOWN TO DRAIN PIPE
DIRECTION OF TRAVEL
Water Supply Line
SEPTIC TANK
TO DRAIN FIELD
SCHEMATIC VIEW
NO SCALE

Drawing #2

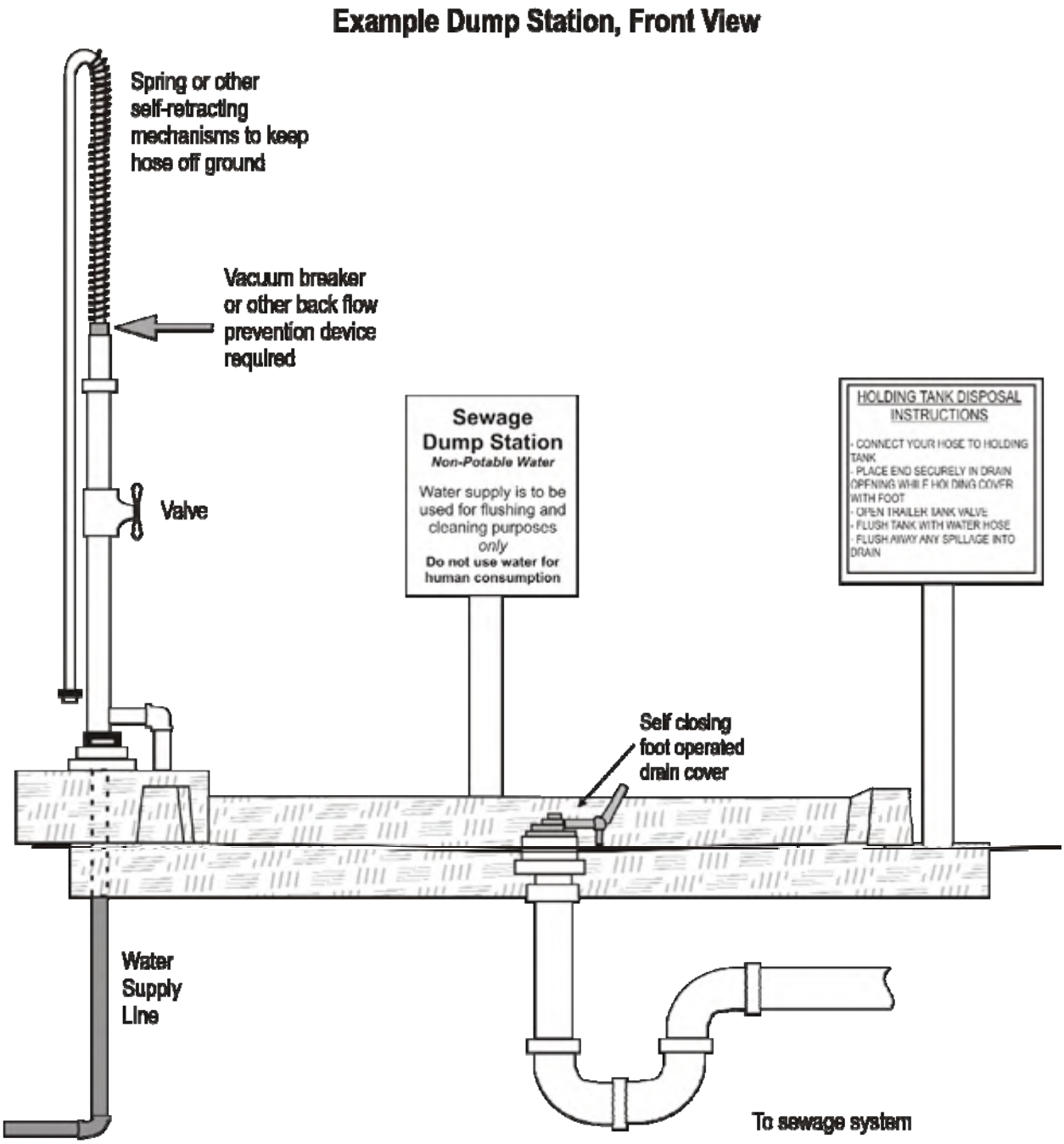

Note: Waste piping will be not less than 4 inches in diameter unless specified by applicable law.

[Authority: O.C.G.A. §§ 31-2A-6 and 31-28-5]

\

511-6-2-.10 Sewage Disposal.

(1) Connection shall be made to a public or community sewage treatment system when such system is available within two hundred feet of the property line, or available in a public right-of-way abutting the property.

(2) Where public sewers are not available, as determined by the local governing agency, sewage disposal shall be provided to effectively dispose of all water carried wastes in a sanitary manner. No sewage, waste water, or other liquid effluent shall be discharged in such manner as to enter surface or subsurface water except following a treatment process approved prior to construction in conformity with existing State and local laws or by other means approved by the Health Authority. Such sewage disposal systems shall be constructed and maintained in a manner to prevent the creation of unsanitary conditions. The Health Authority may approve existing private sewage disposal systems giving satisfactory service.

(3) When central toilet/shower buildings are provided on the premises of a tourist accommodation, a dump station must be installed and sized based on the total number and type of trailer sites to be served and projected sewage flow, and all in accordance with local codes.

[Authority: O.C.G.A. §§ 31-2A-6 and 31-28-5]

511-6-2-.11 Plumbing. All plumbing in tourist accommodations shall comply with State and local laws, ordinances or regulations. In the absence of State and local laws, ordinances or regulations, the provisions of the current “International Plumbing Code with Georgia Amendments or future subsequent versions adopted thereafter shall prevail.

[Authority: O.C.G.A. §§ 31-2A-6 and 31-28-5]

511-6-2-.12 Garbage and Refuse Disposal.

(1) At least one Health Authority approved indoor container for waste shall be provided for each indoor dwelling unit to be rented. Containers shall be constructed of durable metal or other materials which do not leak, do not absorb liquids and do not support combustion. Such containers shall be thoroughly cleaned on the inside and outside each time they are emptied unless liners are used.

(2) All outside refuse or garbage storage containers shall be constructed of durable metal or other approved types of materials, which do not leak and do not absorb liquids and shall be provided with tight-fitting lids or covers and shall be kept covered when stored. Each container shall be located within 100 feet of dwelling units or trailer spaces or in a location approved by the Health Authority and shall be cleaned at such frequency as to prevent a nuisance or odor.

(3) Adequate cleaning facilities shall be provided and each garbage or recycling storage room, enclosure, or container shall be thoroughly cleaned after the emptying or removal of refuse or garbage. Areas surrounding these rooms, enclosures, and containers shall be kept clean and orderly. Liquid waste resulting from the cleaning of containers shall be disposed of as sewage.

(4) Except for garbage facilities associated with Camp Grounds and Bed & Breakfast Inns, for all newly constructed, remodeled, or renovated establishments, refuse and garbage storage containers must be stored on a properly constructed sealed concrete slab or machine laid sealed asphalt. However, the Health Authority may require storage containers to be on similar properly constructed storage facilities for Camp Grounds and Bed & Breakfast Inns should insanitary conditions warrant such facilities.

(5) Refuse shall be collected in accordance with municipal practices where available. Where such services are not available the tourist accommodation shall dispose of the refuse in compliance with all Federal, State, local laws and or ordinances.

[Authority: O.C.G.A. §§ 31-2A-6 and 31-28-5]

511-6-2-.13 Insect and Rodent Control.

(1) Effective and appropriate measures shall be taken to eliminate the presence of rodents and flies, roaches, bed bugs, and other insects on the premises. The premises shall be kept in such condition as to prevent the attraction, harborage or feeding of insects or rodents. Restricted use pesticides, as specified in 40 CFR 152 Subpart I - Classification of Pesticides shall be applied only by a licensed professional. All pesticide applications must be in accordance with current state and federal laws and the product label. Applying pesticides within buildings using area fog dispersal methods or as warranted under DPH Rule-.20(4)(c) is restricted to licensed pest control professionals as part of an integrated pest management program.

(2) A record must be maintained on file and available at request of Health Authority for no less than 18 months of any pesticide use on the premises, except for the occasional use of consumer insect sprays on small spots in accordance with the product label. The record may be made by the permit holder or provided by the applicator, and shall list the following information:

(a) amount and concentration of product used;

(b) name of product used;

(c) date and location of application;

(d) application method;

(e) pest targeted; and

(f) name of applicator.

(3) Openings to the outside shall be effectively protected against the entrance of rodents and insects by tight-fitting doors, closed windows, screening, controlled air currents or other means. Screen doors shall be self-closing and screens for windows, doors, skylights, transoms and other openings to the outside shall be tight-fitting and free of breaks. Screening materials shall not be less than sixteen mesh to the inch. Screen doors for sliding patio doors will not be required to be self closing except in food service, preparation and utensil washing areas of permitted food service establishment kitchens and bed and breakfast inns.

[Authority: O.C.G.A. §§ 31-2A-6 and 31-28-5]

511-6-2-.14 Construction, Layout and Furnishings.

(1) Floors, walls, ceilings. windows, doors and all other appurtenances shall be of sound construction, properly maintained in good repair and shall be kept clean. In all new constructed and extensively remodeled residential kitchens used in bed and breakfast inns, coved base molding may be required. Walls and ceilings in residential kitchens shall be easily cleanable and light colored.

(2) Cooking is only allowed within tourist rooms that have been constructed to include permanently installed cooking facilities as approved by the Health Authority and other applicable state and local authorities. This rule does not prohibit coffee makers and microwave ovens belonging to the tourist accommodation.

(3) Ventilation shall be provided for all rooms. Where ventilation is provided by means of windows, they shall open directly to the outside air and the openable window area of each room shall be not less than 1/20 of the floor area served. Where ventilation is provided by other means, it shall comply with the requirements of the current International Mechanical Code with Georgia Amendments or future subsequent revisions adopted thereafter to provide comfortable living conditions, remove objectionable odor and fumes, and prevent excessive condensation. Ventilation systems shall comply with applicable State and local fire prevention requirements and building codes.

(4) All rooms shall be well lighted. When natural light fails to provide sufficient illumination, evenly distributed artificial light shall be provided to maintain a lighting intensity of not less than ten foot candles at 30" above the floor.

(5) All furniture, draperies, appliances, carpets, and other accessories, in the tourist accommodation, whether the property of the tourist accommodation owner or not, shall be

considered the property of and furnished by the tourist accommodation for purposes of enforcement of this Chapter, and must be maintained in good repair, clean, and free of vermin.

(6) Washable mattress pads or covers shall be used on all mattresses. Beds, mattresses, springs, slats, mattress pads, mattress and bed coverings, pillow and pillow covers shall be clean and free from vermin. Each bed shall be provided, as a minimum, with two sheets and one pillow and pillowcase. After each occupancy and upon the request of the occupant, sheets and pillowcases shall be changed with fresh laundered linens. During occupancy, linens shall be changed at a minimum frequency of not less than weekly.

(7) Sleeping quarters must be separated by a wall from the food preparation, food storage, and food service areas of a bed and breakfast inn.

[Authority: O.C.G.A. §§ 31-2A-6 and 31-28-5]

511-6-2-.15 Heating and Fire Safety.

(1) All heating appliances shall be designed and installed to carry all flue gases to the outside of building through the flue outlet.

(2) Unvented combustion type heaters shall not be installed and/or used on the premises, unless they are in compliance with current State of Georgia fire safety codes and installed in accordance with the manufacturer's recommendations.

(3) All automatic natural gas heating equipment shall be equipped with automatic safety pilot. All liquefied petroleum gas burning appliances shall be equipped with 100% safety cut-off pilot.

(4) Gas water heaters shall not be installed in bathrooms or bedrooms, or in closets connected thereto.

(5) All gas-fired equipment shall be inspected at least annually by a qualified licensed contractor or local fire authority, if available. Points to be inspected are proper construction and installation, malfunctions and adjustments of controls and burners, faulty heat exchangers and vent obstructions. Any defects found on inspection must be corrected by a qualified heating contractor

prior to use of the equipment. Upon request, the operator shall provide evidence of inspection and/or correction of any deficiency.

[Authority: O.C.G.A. §§ 31-2A-6 and 31-28-5]

511-6-2-.16 Swimming Pools.

(1) Regulations of the Department and/ county in which govern the design, construction, operation and maintenance of swimming pools or spas shall apply to pools and spas operated in conjunction with a tourist accommodation.

(2) If a swimming pool or spa at a bed and breakfast inn cannot comply with applicable regulations, then it must be enclosed with a fence at least four feet in height with a locked gate and used only by family members. In such case, guests shall not be allowed to use swimming pool or spa.

(3) If a portable spa unit is installed and operated on the premises of a detached cabin used for lodging as part of a tourist accommodation and if the owner complies with (4) and (5) of this Rule, then the portable spa will be exempt from (1) of this Rule. The owner must submit appropriate documentation for review and receive written approval from the Health Authority before operation.

(4) **Installation:**

(a) All portable units shall be for individual use by the occupants only and shall be permanently installed outside of the cabin and on the premises of the individual dwelling unit.

(b) If the portable unit is installed in an outside enclosure, then adequate mechanical exhaust ventilation shall be provided to minimize heat and steam accumulation.

(c) The portable unit shall be constructed of a hard non-absorbent material such as fiberglass, acrylic or ceramic tile and provide a slip resistant walking surface. PVC or vinyl-liner materials shall not be used.

(d) Portable units shall be installed in compliance with applicable electrical and plumbing codes.

(e) Portable units shall be installed in accordance with the manufacturer's instructions and applicable wastewater disposal codes.

(f) Portable units shall be equipped to avoid suction entrapment by providing suction outlets with covers that have been tested and approved by a nationally recognized testing laboratory and shall comply with ANSI/ASME A112.19.8-2007, Suction Fittings For Use in Swimming Pools, Wading Pools, Spas and Hot Tubs, or most recent edition.

(5) **Operation:**

(a) Portable units operated as a chamber shall be drained, cleaned, sanitized and refilled prior to the next use.

(b) The unit shall be filled with potable water from an approved source immediately prior to use. The water fill line shall be protected with an approved backflow prevention device.

(c) A thermometer shall be provided to ensure that the water temperature does not exceed 104° F. A sign shall be posted adjacent to the unit stating, “Max. Temp. 104° F.” and list manufacturer’s precautions on use.

(d) The unit shall be completely drained immediately after each use. A drain shall be located at the lowest part of the unit and all plumbing components shall be self-draining. All waste water shall be disposed of in a manner approved by the Health Authority. Wastewater may be discharged into a sanitary sewer through an approved air gap or into an approved subsurface disposal system or by other means approved by the Health Authority.

(e) The operator must provide the guest with the procedures and warnings on spa usage. The spa must remain empty until the tourist request spa services.

(f) Hours of spa services must be defined by the operator.

(g) Written procedures for cleaning and sanitizing shall be provided and maintained by the operator. The sanitizer solution shall be an EPA-registered disinfectant and shall be recirculated through the jet and/or aeration system in accordance with the disinfectant manufacturer’s directions.

(h) Filtration systems and water treatment systems shall be operated according to manufacturer's requirements. Units with these systems shall be located outdoors, unless adequate ventilation is provided in an outside enclosure.

(i) If unit is not located within an outside enclosure, then a protective barrier with a self closing, self latching gate meeting the applicable local or state building code or a cover meeting the applicable ASTM standard shall be used at the facility.

(j) Spas will also be cleaned and sanitized between occupants, and a log documenting cleaning must be maintained onsite, and made readily available at the request of the Health Authority.

[Authority: O.C.G.A. §§ 31-2A-6 and 31-28-5]

511-6-2-.17 Laundry Facilities.

(1) Where laundry facilities are provided, they shall be separate from other facilities, of sound construction, and shall be kept clean, and in good repair. Laundry rooms for guest use shall be vented to the exterior and well lighted. The tourist laundry equipment provided for tourists to use shall be separate from the tourist accommodation laundry facility. Laundry equipment shall be provided with hot and cold water under pressure. Dryers shall be vented to the outside. A storage area or room shall be required to store clean linens and laundry at least a minimum of 6-inches off the floor and be free of pests, vermin, dust and moisture. If a tourist accommodation does not have an approved laundry facility, the tourist accommodation owner may contract with an approved laundry service provider. In all newly constructed permitted facilities, and existing facilities remodeled or renovated after the adoption of these rules, except for bed and breakfast inn, a floor drain located to receive intentional or accidental drainage from equipment or plumbing shall be required in laundry facilities.

(2) Housekeeper carts shall be so arranged that clean replacement supplies, clean linens, and cleaned and sanitized multi-use equipment and utensils shall be protected from soiled items being removed from each room. Soiled linens and refuse shall be placed in appropriate containers on

housekeepers' carts. Any spray bottle used in cleaning a tourist room or stored on the housekeeping cart shall be labeled with its contents. Cleaners and sanitizer shall be used according to the manufacturer's use direction and label.

[Authority: O.C.G.A. §§ 31-2A-6 and 31-28-5]

511-6-2-.18 Grounds.

(1) The grounds of a tourist accommodation shall be graded to drain. Serviceable walks and driveways shall be provided.

(2) Grounds, including spaces beneath buildings and trailers, shall be kept clean and free of litter.

(3) All walkways, porches, and hallways shall be maintained in good repair. Only articles necessary to the operation and maintenance of the establishment shall be stored on the premises.

(4) There shall be not less than fifteen feet clear space between all trailers and nearby buildings, nor less than ten feet between trailers and internal driveways within the trailer park.

(5) Each trailer space shall be distinctly marked. Trailer spaces shall abut on a well-defined all-weather driveway of not less than twenty feet of unobstructed width and such driveway shall have clear access to a public thoroughfare.

(6) Grounded and weather-proof electrical outlets supplying at least one-hundred- fifteen volts shall be provided at each trailer space. Power lines shall be located underground or suspended at least eighteen feet above ground. All electrical work and materials shall comply with the applicable International Electrical Code with Georgia Amendments and local laws, ordinances, or regulations.

[Authority: O.C.G.A. §§ 31-2A-6 and 31-28-5]

511-6-2-.19 Food Service Options.

(1) **Food Service Establishment.** All food service facilities except for bed and breakfast inns shall comply with provisions of O.C.G.A. Chapter 26-2. Art. 13 and the rules, regulations and standards adopted thereunder. Bed and breakfast inns, and tourist accommodations without a foodservice permit, shall instead comply with this Rule.

(2) **Continental Breakfast.** A tourist accommodation without a food service permit may serve a continental breakfast as defined in DPH Rule 511-6-2-.03(d); foods not requiring preparation and cooking; potentially hazardous foods commercially prepared and packaged in single-servings; non potentially hazardous foods commercially prepared and packaged and served from the original container or an approved dispenser such as bagels or bread that may require only reheating or toasting by tourists, if the conditions of subsections 2(a) through (j) are met. All food items on display must be protected from contamination. Food shall be safe for human consumption, and obtained from sources that comply with applicable laws.

(a) A minimum two-compartment sink, large enough to fully immerse the largest utensil used and a refrigerator which can maintain food temperatures at or below 41°F (5°C) shall be required. The need for a refrigerator may be waived if no potentially hazardous foods are served.

(b) Condiments containing potentially hazardous ingredients and milk must be stored in a refrigerator, except for individual, single-service coffee creamers that are non-dairy, and individual, single-service, ultra high pasteurized coffee creamers that are labeled by the manufacturer as not requiring refrigeration.

(c) A thermometer, accurate to (+2ºF (±1ºC) shall be provided in the refrigerator and located to be easily readable.

(d) Only single service disposable plates, cups and utensils shall be used in a continental breakfast operation. However, a facility may use multi-use utensils and/or a mechanical bulk juice dispenser, if the operator provides warewashing equipment to wash, rinse and sanitize all multi-

use utensils. At minimum, the operator shall install a three compartment sink large enough to fully immerse the largest utensil used and provide adequate space to air-dry and store the utensils.

(e) Ice used for keeping displayed foods cold must be constantly drained and cannot be used in beverages. If ice is needed for beverages, it must be dispensed from self service machines or presented in cups pre-filled by the management. Pre-filling shall be done only with the use of an approved ice scoop.

(f) If ready-to-eat, whole raw, uncut, fruits are included within continental breakfast menus, then adequate protective display equipment such as sneeze guard shielding or other protective display equipment must be provided to protect these food items from contamination from the tourist. In addition, self-service utensils, such as tongs and/or single-service articles, such as sanitary deli paper, must be provided to protect ready-to-eat, whole raw, uncut, fruits from potential contamination from consumer self-service.

(g) In all newly constructed, remodeled, or renovated establishments serving continental breakfasts, an employee handsink equipped with hot and cold water under pressure and maintained with a supply of dispensed soap and paper towels must be provided for hand washing. The handsink shall be located inside the physical facility where the continental breakfast food handling and warewashing operations are conducted. The water at this hand washing sink must be tempered by a mixing faucet.

(h) In all newly constructed, remodeled or renovated establishments serving continental breakfasts, the physical facilities for food storage, food transfer and equipment warewashing shall comply with the following criteria:

1. Physical facilities must be physically and functionally separate from those associated with laundry, janitorial, living and or sleeping activities and associated storage facilities;

2. Floors, floor coverings, walls, wall coverings, and ceilings, with the exception of a ceiling in a non perishable food storage and seating area, shall be designed, constructed, and installed so they are smooth and easily cleanable;

3. Studs, joists, and rafters may not be exposed within physical facilities, except as listed in (h) 2. and

4. Physical facilities shall be so designed and constructed so as to exclude the presence of vermin.

5. All equipment, food, and supplies must be kept at least six inches off of the floor.

(i) Any preparation beyond the limitations of a continental breakfast requires a food service permit.

(3) **Bed and Breakfast Inn.** A bed and breakfast inn may serve a full meal prepared as referenced in DPH Rule 511-6-2-.03 (b) within this Chapter in a residential kitchen located within the inn, if the following requirements are met.

(a) Limited Food Service: Food may only be prepared for guests staying in rooms located in the bed and breakfast inn. No catering off the premises will be allowed.

(b) Food Supplies:

1. Food shall be in sound condition, safe for human consumption, and obtained from sources that comply with the applicable laws relating to food safety. The use of food in hermetically sealed containers that was not prepared in a food processing establishment is prohibited. However, jams, jellies, and preserves made at the bed and breakfast inn from naturally high-acid fruits may be served to guests.

2. Fluid milk and fluid milk products used shall be pasteurized and shall comply with applicable law. Dry milk and milk products used shall be made from pasteurized milk and milk products and shall be used only in cooking. Raw milk shall not be provided or used.

3. Only clean shell eggs meeting U.S. Department of Agriculture grade standards or pasteurized liquid, frozen or dry eggs or pasteurized dry egg products shall be used.

4. Only ice which has been manufactured with potable water and handled in a sanitary manner shall be used.

(c) Food Protection:

1. All food shall be prepared, stored, displayed, dispensed, placed, transported, sold, and served so as to be protected from dirt, vermin, unnecessary handling, droplet contamination, overhead leakage, or other contamination.

2. The temperature of potentially hazardous foods shall be 41^0F (5^0C) or below or 135ºF (60°C) or above at all times, except during necessary times of preparation.

(i) Potentially hazardous foods shall be stored in a refrigerator or freezer that can maintain required product temperatures.

(ii) A thermometer accurate to ±2°F shall be provided for each refrigeration unit and shall be located to indicate the air temperature in the warmest part of the unit and shall be affixed to be readily visible.

(iii) Containers of potentially hazardous food displayed for service may be placed in an ice bed or held by a similar means which maintains the food at or below 41°F. An accurate easily readable metal probe thermometer suitable for measuring the temperature of food shall be readily available on the premises.

3. Hermetically sealed packages shall be handled so as to maintain product and container integrity.

4. Containers of food shall be stored a minimum of six inches above the floor in a manner that protects the food from splash and other contamination and that permits easy cleaning of the storage area.

5. Pets may be present on the premises, but shall be kept out of food preparation and dining areas at all times. This exclusion shall not apply to fish in aquariums. Service animals accompanying handicapped persons and trainers of such animals shall be permitted in dining areas.

6. Laundry facilities may be present in the residential kitchen, but shall not be used during food preparation and service. Laundry facilities will consist of at least a residential clothes washer and

dryer and adequate storage facilities for clean laundry and separation of soiled laundry and supplies.

7. Tourists shall not be allowed to use cooking facilities in the residential kitchen.

8. No insecticide, rodenticide, or other poisonous substance shall be stored in any food preparation area, except in a separate enclosure provided for that purpose. All poisonous substances, detergents, bleaches, cleaning compounds, or any other injurious or poisonous material shall be specifically and plainly labeled as to contents and hazardous use and shall be stored only in their original, labeled container. Such products shall not be used or stored in a manner which may cause contamination or adulteration of food, food contact surfaces, or utensils.

(d) Food Preparation:

1. Food shall be prepared with a minimum of manual contact. Food shall be prepared on food-contact surfaces and with utensils that are clean and have been sanitized. Food handlers shall not handle or touch ready-to-eat foods with their bare hands.

2. Raw fruits and raw vegetables that will be cooked, cut, or combined with other ingredients, or that will be otherwise processed into food products by the food establishment, shall be cleaned with potable water in sinks or containers that have been washed and sanitized before being used.

3. Potentially hazardous food (time/temperature control for safety food) processed by cooking shall be cooked to heat all parts of the food to a minimum time/temperature as follows: (i) shell eggs (for immediate service), beef steak, and unground meat and fish shall be cooked to an internal temperature of 145^{0}F (63^{0}C) or above for 15 seconds; (ii) ground meat and pork, fish, game animals raised for food, and eggs for hot holding shall be cooked to an internal temperature of at least 155^{0}F (68^{0}C) for 15 seconds; (iii) roast beef shall be cooked to an internal temperature of at least 130^{0}F (54^{0}C) for 112 minutes; (iv) poultry or any stuffed meat, poultry, or fish shall be cooked to an internal temperature of 165^{0}F (74^{0}C) for 15 seconds. See the Department's rules and regulations governing food service establishments Chapter 511-5-14 or future subsequent Chapters adopted thereafter for reference to time/temperature cooking requirements.

4. Potentially hazardous foods (time/temperature control for safety foods) shall be cooked and immediately served to tourists. The following potentially hazardous food handling practices are prohibited:

(i) Cooling and reheating prior to service.

(ii) Hot holding for more than two hours.

(iii) Undercooked or raw potentially hazardous food (time/temperature control for safety food) of animal origin served to tourists.

(iv) Service of leftovers.

5. All frozen food shall be kept frozen until preparation. No food which has been thawed shall be refrozen unless it has been cooked or processed. Potentially hazardous foods shall be thawed:

(i) In refrigerated units at a temperature not to exceed 41°F (5°C); or

(ii) Under potable running water at a temperature of 70°F (21°C) or below, with sufficient water velocity to agitate and float off loose food particles into the overflow and for a period of time not to exceed that reasonably required to thaw the food; or

(iii) In a microwave oven only when the food will be immediately transferred to conventional cooking units as part of a continuous cooking process or when the entire, uninterrupted cooking process takes place in the microwave oven; or

(iv) As part of the conventional cooking process.

(e) Food Display and Service:

1. Employees serving food shall use tongs, other utensils, or wear plastic gloves.

2. When food is displayed for customer self service, it is not necessary to have protective sneeze shields as long as the following guidelines are met.

(i) Potentially hazardous foods are kept at or below 41°F (5° C) or at or above 135°F (57°C).

(ii) Food is displayed no more than two hours.

(iii) No open food or potentially hazardous foods is reserved or reused.

(iv) Tongs or other suitable utensils are provided so that there is no hand contact with the food.

(f) Health and Practices:

1. No person, while infected with a disease in a communicable form that can be transmitted by foods, or who is a carrier of organisms that cause such a disease, as stated within the Department's rules and regulations governing food service establishments Chapter 511-5-14 or future subsequent Chapters adopted thereafter, or while affected with a boil, infected wound, or acute respiratory infection, shall work in any capacity in which there is a likelihood of such person contaminating food or food contact surfaces with pathogenic organisms or transmitting disease to other persons.

2. Persons engaged in food preparation, service, and warewashing operations shall wear clean clothing and properly wash their hands and the exposed portions of their arms with soap or detergent and warm water before starting work, after smoking, eating, or using the toilet, and as often as is necessary during work to keep them clean. Employees shall keep their fingernails trimmed and clean. All bed and breakfast inns permitted or extensively remodeled after the effective date of this rule shall provide facilities exclusively for handwashing within or adjacent to each kitchen. In bed and breakfast inns existing prior to the effective date of these "Rules", the utensil warewashing sink may be used for handwashing. Soap and paper towels in dispensers must be provided.

3. Persons engaged in food preparation shall wear a hair net, cap, or other suitable covering which restrains all loose hairs and shall maintain a high degree of personal cleanliness and conform to good hygienic practices during all working periods.

4. Employees shall consume food or use tobacco only in designated areas. Such designated areas shall not be located in food preparation areas or in areas where the eating or tobacco use of an employee may result in contamination of food, equipment, or utensils.

(g) Equipment and Utensils:

1. Equipment and utensils shall be constructed and repaired with safe materials, including finishing materials; shall be corrosion resistant and nonabsorbent; and shall be smooth, easily cleanable and durable under conditions of normal use. Single service articles shall be made from clean, sanitary, and safe materials. Equipment, utensils and single service articles shall not impart odors, color and taste nor contribute to the contamination of food.

2. Safe plastic or safe rubber or safe rubber-like materials that are resistant under normal conditions of use to scratching, scoring, decomposition, grazing, chipping, and distortion, that are of sufficient weight and thickness to permit cleaning and sanitizing by normal warewashing methods are permitted for repeated use.

3. Single service articles shall not be re-used.

4. All equipment and utensils shall be maintained in good repair.

(h) Cleaning and Sanitization of Equipment and Utensils:

1. Food utensils and equipment shall be stored in a manner to avoid contamination.

2. Food contact surfaces and sinks shall be smooth and easily cleanable.

3. Food contact equipment, surfaces, tableware, and utensils shall be cleaned and sanitized prior to food preparation for the public and after each use.

4. Sinks, basins, or other receptacles used for cleaning of equipment and utensils shall be cleaned before use.

5. Equipment and utensils shall be pre-flushed or pre-scraped and, when necessary, presoaked to remove food particles and soil.

6. Manual cleaning and sanitizing of cooking equipment, utensils, and tableware shall be conducted as follows:

(i) A 3-compartmented, warewashing sink shall be provided and used. The Health Authority may allow the use of compartments other than sinks.

(ii) All five steps of the warewashing process shall be completed: pre-rinsing or scraping; application of cleaners for soil removal; rinsing to remove cleaning chemicals; sanitizing and air drying.

(iii) Sanitizing may be accomplished by immersion or sanitizing in place with the use of a 50 ppm chlorine solution or 12.5 ppm iodine solution or other chemical sanitizer which meets the requirements of 40 Code of Federal Regulation 180.940 Tolerance exemptions for active and inert ingredients for use in antimicrobial formulations (food-contact surface sanitizing solutions).

(iv) Wash, rinse and sanitizing solutions shall be maintained in a clean condition.

(v) Water for washing and rinsing shall be maintained at 110^0F (43^0C) or above. Water for sanitizing shall be maintained at 75^0F (24^0C) or above. If using iodine for chemical sanitization, water shall be at a pH not higher than 5.0.

(vi) A test kit or device that measures the parts per million concentration of the sanitizing solution shall be used each time the sanitizing solution is changed.

7. Mechanical cleaning and sanitizing shall be conducted as follows:

(i) A commercial warewasher must be certified by NSF standards or equivalent, in good repair and operating to manufacturer's specifications.

(ii) If using a non-commercial warewasher, it must remove all physical soil from all surfaces of dishes and must be equipped with a high temperature rinse cycle such as a sani-cycle and all cycles on the machine must be used (prewash, wash, sanitizing rinse) and be certified by NSF standards or,

(iii) If no high temperature rinse cycle is provided, the hot water supplied to the machine must be at a minimum of 155^0F (68^0C). The operator shall use daily, a maximum registering thermometer or a heat thermal label to determine that the sanitizing rinse water temperature is a minimum of 155^0F (68^0C).

(iv) The dishwasher warewasher must be installed and operated according to manufacturer's instructions for the highest level of sanitization possible when sanitizing residential kitchen

facilities' utensils and tableware. A copy of the instructions must be available on the premises at all times.

8. There shall be sufficient area or facilities such as portable dish tubs and drain boards for the proper handling of soiled utensils prior to washing and of cleaned utensils after sanitization. Use shall not to interfere with safe food handling, handwashing, and the proper use of dishwashing facilities. Equipment, utensils, and tableware shall be air dried only.

[Authority: O.C.G.A. §§ 31-2A-6 and 31-28-5]

511-6-2-.20 Compliance Procedures.

(1) **Summary Suspension of Permits.** The Health Authority shall have the power and authority to summarily suspend a permit if the owner or operator refuses to allow the Health Authority to enter upon and inspect the premises of the tourist accommodation at any reasonable time and in a reasonable manner, or if any part of the tourist accommodation presents an imminent health hazard to members of the public, including but not limited to (i) an unapproved or improperly functioning wastewater disposal system, (ii) an infestation of insects, rodents, or other vermin, or (iii) an unapproved water supply or inadequate water system.

(a) A summary suspension shall be made in writing and shall be effective immediately upon receipt by the owner or operator, and operation of the tourist accommodation must cease immediately. If neither the owner nor operator can be found, notification is achieved by tacking the notice to the front door of the tourist accommodation and mailing a copy to the owner or operator. The notice of suspension shall state the violations that justify summary suspension, and the corrective action that must be taken in order for the summary suspension to be lifted.

(b) The owner or operator may seek review of the summary suspension by written request to the District Health Director. The matter shall be heard by the District Health Director, or a supervisory level employee designated by the District Health Director who was not personally involved in the

inspection, acting as a review official. The Health Authority shall make every effort to arrange a hearing within 72 hours of the request.

(c) The hearing shall be conducted informally and without application of the rules of evidence. Both the Environmental Health personnel and the owner or operator shall be given an opportunity to present any arguments or evidence in support of their positions. The review official may uphold the summary suspension, or may modify or lift the suspension on such conditions as may be appropriate.

(d) The owner may request a hearing under this subsection without prejudice to its right to pursue an appeal to the Department pursuant to O.C.G.A. § 31-5-3.

(2) **Partial closure or restricted access**. The Health Authority shall be authorized to close or restrict access to any area of the premises found in violation of a critical item under Areas of Critical Public Health Risk on the Tourist Accommodation Inspection Record or that may be determined by the Health Authority to be an imminent health hazard to the public. Such area shall be closed until the violations have been corrected or imminent health hazards abated as determined by the Health Authority.

(a) Closure and restriction actions must be recorded on an inspection record, identifying the problem and the corrective actions to be taken by the permit holder or person in charge; and

(b) The date and time the violation was noted, and the expected date of correction to be completed must be recorded on the inspection record as well.

(c) Considering the nature and the complexity of the corrective action or plan for correction required, the Health Authority may specify that the permit holder obtain the services of an appropriate licensed professional to correct a violation or imminent health hazard. Then, the operator must submit a plan of correction developed by the professional for review by the Health Authority. Upon completion of the corrective action, a letter of verification signed by the appropriate professional must be submitted before scheduling a re-inspection as specified in

subsection(2)(d) of this Rule. Failure to comply with these actions may led to an enforcement action outlined in subsection (1)(a) of this Rule.

(d) At its discretion, the Health Authority shall have the authority to direct the permit holder or person in charge to relocate tourists to another location within the tourist accommodation. If such action is taken, the Health Authority will provide a detailed explanation of such action on the inspection report form, and a re-inspection of the vacated area by the Health Authority will be required before tourists are permitted to return to locations from which they had been previously removed.

(3) **Suspension or Revocation of Permits.** The Health Authority shall have the power and authority to suspend or revoke a permit if the owner or operator of a tourist accommodation is unwilling or unable to comply with these regulations, the regulations of the local Health Authority, or the provisions of O.C.G.A. Title 31-28-1 et seq.

(a) An owner or operator shall be presumed unwilling or unable to comply if he or she refuses to allow the Health Authority to enter upon and inspect the premises of the tourist accommodation at any reasonable time and in a reasonable manner, or if any critical violation is found to be uncorrected upon the third consecutive inspection, or upon continuous violation of other rules in the chapter.

(b) The revocation of a permit may be appealed to the Department of Public Health in accordance with O.C.G.A. Section 31-5-3 by sending written notice, by certified mail or statutory overnight delivery, addressed to the Department of Public Health, Office of General Counsel, with a copy to the Health Authority official that revoked the permit. Within ten days of receiving the notice, the Health Authority shall provide the Department with a copy of its entire file on the inspections and actions that led to the revocation of the permit. The Department shall schedule a hearing within 20 days of receiving the notice, and shall decide the matter upon the arguments of the parties and the administrative record.

(4) **Voluntary Closure.** In lieu of suspension or revocation of a permit, the Health Authority may in its discretion allow a tourist accommodation to voluntarily close all or part of the premises until such time as violations are corrected, and upon such additional restrictions as it may deem appropriate.

(5) **Resumption of Operations.** If operations of a tourist accommodation are discontinued due to the order or action of the Health Authority, then the permit holder shall obtain approval from the Health Authority before resuming operations.

[Authority: O.C.G.A. §§ 31-2A-6, 31-5-3, and 31-28-5]

511-6-2-.21 Environmental Health Personnel.

(1) All Environmental Health personnel who are assigned responsibilities in tourist accommodation plan review, permitting, inspecting, or other means of enforcing this Chapter, will complete the minimum state sponsored one week training course and exam requirements and obtain at least two hours of in-service training annually.

(2) All in-service training must be approved by the local Environmental Health supervisor or lead personnel. Employee attendance records of approved training shall be maintained in the county of employment and shall be subject to electronic submission and Department monitoring.

[Authority: O.C.G.A. §§ 31-2A-6 and 31-28-5]

511-6-2-.22 Fees. The Department may adopt a fee schedule to support required training, monitoring, and evaluation activities.

[Authority: O.C.G.A. §§ 31-2A-6 and 31-28-5]

511-6-2-.23 Effective Date. These regulations shall become effective on January 1, 2014.

[Authority: O.C.G.A. §§ 31-2A-6 and 31-28-5]